Client _____ Quantity _____

Project _____ Position _____

Roll-in Levtronic J12

Model: J120/1FH **Cod:** J31120800101



Levtronic Roll-in J12 retarder prover cabinet, 1 door, temperature range -6°+40°C. It is equipped with the functions: retarded proving, manual proving, continuous cycle and storage. Plug-in refrigeration unit, 5 heavy duty climatic class and R290 ecological refrigerant gas. Electric defrost, adjustable ventilation 25-100% and adjustable humidity 45-95%. Water purification filter. 4,3" touch screen with operating mode with customisable recipes. For trolley EN60x80, access ramp included. Led lighting, water drain, snap lock with key, Electronic expansion valve and anti-corrosion painted evaporator. 75 mm insulation thickness - HFO with high insulation performance and low environmental impact (CFC, HCFC, HFC free); easily replaceable triple chamber magnetic gasket. Interior/exterior AISI 304 stainless steel; external back in galvanised steel. Replaceable refrigerant system FSS - Fast Service System - for quick and easy service. Cosmo: wi-fi connection for remote monitoring via Cosmo App. When wired to Coldline counters and cabinets acts as a hub for remote monitoring of connected equipment.

Technical data

Max capacity:	1 trolley GN2/1, EN60x80
Gross capacity:	977 lt
Temperature range:	-6°+40°C
Humidity range:	45% - 95% with humidifier
Refrigerant unit:	Plug-in
Climate class:	5
Cooling gas:	R290 (GWP=3)
Refrigerant Charge:	120g
Defrost:	Electric
Valve:	Supplied standard with solenoid
Dimensions:	810×1015×2115 mm
Packing dimensions:	905×1130×2145 mm
Net / gross weight:	170 Kg / 190 Kg
Net / gross volume:	610 lt / 977 lt
Voltage:	220-240 V - 50 Hz
Total rate:	1360W - 6,2A
Cooling capacity:	668 W*
*:	Evap. -10°C Cond. +55°C

Features

Standard equipment:	LED lighting, lock with key
Control:	4,3" touch screen display with USB port
Doors:	1 door, self-closing, reversible with 105° stop
Door gasket:	Magnetic, triple chamber and easily replaceable
Insulation:	100 mm thickness - CFC/HCFC free
Exterior/interior finishing:	One-piece structure in AISI 304 stainless steel. Back in galvanized steel
Inner corners:	Rounded for easy cleaning and ensuring maximum hygiene
Handle:	Snap-in chrome with integrated lock
Cosmo:	Wi-Fi remote control system

In order to constantly offer the best possible products we reserve the right to make changes on technical specifications without incurring any obligation for equipment previosly or subsequently sold.

Accessories and variants

Alimentazione frequenza 60Hz	Trolley 20T EN60x80 648x810x1490
Other special voltage	Purity C Quell ST 50 filter cartridge

COSMO - wi-fi control

Cosmo is The Nice Kitchen's exclusive Wi-Fi technology that allows Levtronic retarder provers to be connected, updated and monitored from smartphones. Levtronic is also a Cosmo hub and allows remote supervision of the Coldline appliances connected to it. From the CosmoApp you can check the operating conditions of each machine and receive alerts in the event of abnormal operation.

Technical draw

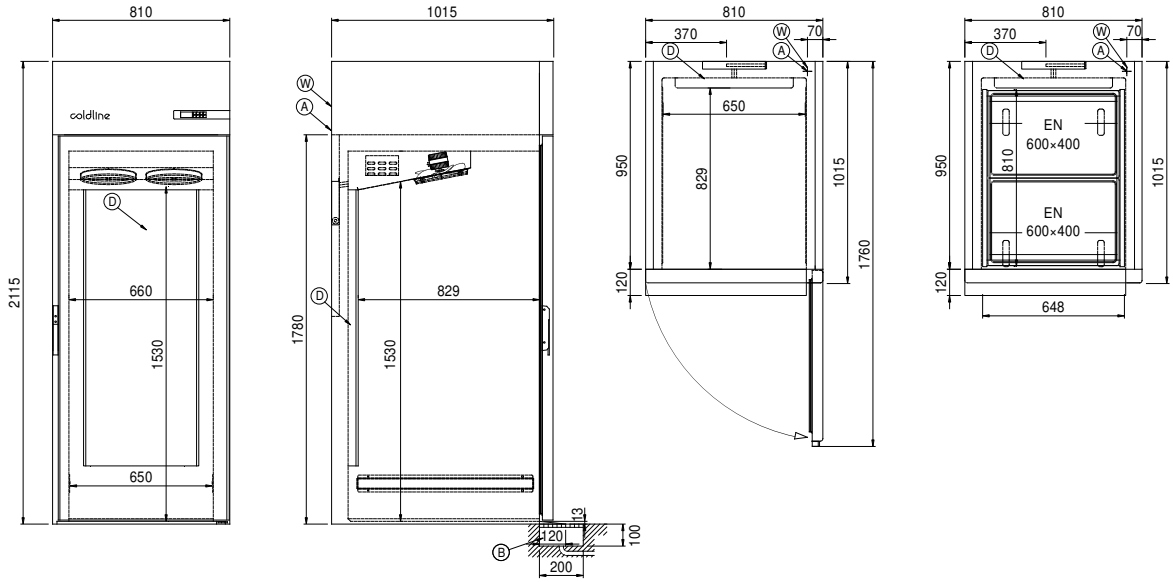

A: Power supply cable outlet

B: Condensation water drain

D: Airflow conveyor

J: Automatic evaporation of condensing water

W: Water mains connection for humidifier - 3/4” female. Unloading not required

In order to constantly offer the best possible products we reserve the right to make changes on technical specifications without incurring any obligation for equipment previosly or subsequently sold.