Client _____ Quantity _____

Project _____ Position _____

Saladette Arkis GN counter 1 door

Model: HS09/1MD-710 **Cod:** H80100000211



Technical data

Top:	Without top
Gross capacity:	120 lt
Temperature range:	-2°+8°C
Refrigerant unit:	Plug-in
Cooling gas:	R290 (GWP=3)
Refrigerant Charge:	110
Defrost:	Hot gas
Body height:	710 mm
Valve:	Supplied standard with solenoid
Dimensions:	820×655×810 mm
Packing dimensions:	915×800×998 mm
Net / gross weight:	80 Kg / 90 Kg
Net / gross volume:	/ 120 lt
Voltage:	220-240 V - 50 Hz
Total rate:	250W - 1,15A
Cooling capacity:	406 W*
*:	Evap. -10°C Cond. +55°C

Features

Standard equipment:	1 slide, 1 plastic coated GN1/1 shelf
Control:	Electronic, display flush with the panel
Doors:	1 door with 180° opening
Door gasket:	Magnetic, triple chamber and easily replaceable
Insulation:	60 mm thickness - CFC/HCFC free
Exterior/interior finishing:	Exterior interior and back in AISI 304 stainless steel. Base in colaminated steel.
Inner corners:	Rounded for easy cleaning and ensuring maximum hygiene
Handle:	Stainless steel AISI 304, 2 mm thick
Racks and slides:	Stainless steel AISI 304
Feets:	AISI 304 stainless steel adjustable h 100/150 mm
Cosmo:	Predisposed for Cosmo Hub connection

In order to constantly offer the best possible products we reserve the right to make changes on technical specifications without incurring any obligation for equipment previosly or subsequently sold.

COSMO - wi-fi control

Cosmo is The Nice Kitchen's exclusive Wi-Fi technology that allows Coldline, Modular and Nevo appliances to be connected and monitored from a smartphone. The counter, connected with Cosmo kit via cable to a Cosmo hub (MODI, VISION, THAW.PRO, LEVTRONIC, QUBI) or with Cosmo Wi-Fi kit, can be monitored by the CosmoApp and receive alerts in case of abnormal operation.

Technical draw

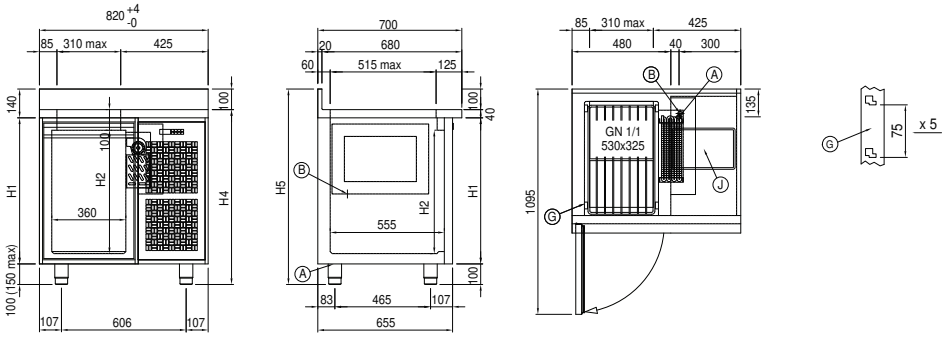

A: Power supply cable outlet

B: Condensation water drain

G: Racks pitch

J: Automatic evaporation of condensing water

In order to constantly offer the best possible products we reserve the right to make changes on technical specifications without incurring any obligation for equipment previosly or subsequently sold.