Client _____ Quantity _____

Project _____ Position _____

Snack Arkis GN counter 2 doors

Model: HP13/1B-490 **Cod:** H80201000404



Technical data

Top:	With top
Gross capacity:	177 lt
Temperature range:	-15°-22°C
Refrigerant unit:	Plug-in
Energetic class:	D
Energy efficiency index:	51,3
Annual consumption:	1535 kW/h annum
24h consumption:	4,205 kW/h/24h
Climate class:	5
Cooling gas:	R290 (GWP=3)
Refrigerant Charge:	110g
Defrost:	Hot gas
Body height:	490 mm
Valve:	Supplied standard with solenoid
Dimensions:	1300×700×630 mm
Packing dimensions:	1395×800×998 mm
Net / gross weight:	125 Kg / 135 Kg
Net / gross volume:	105 lt / 177 lt
Voltage:	220-240 V - 50 Hz
Total rate:	850W - 3,9A
Cooling capacity:	569 W*
*:	Evap. -30°C Cond. +55°C

Features

Standard equipment:	2 slides, 2 plastic coated GN1/1 shelves
Control:	Electronic, display flush with the panel
Doors:	2 doors with 180° opening
Door gasket:	Magnetic, triple chamber and easily replaceable
Insulation:	60 mm thickness - CFC/HCFC free
Exterior/interior finishing:	Exterior interior and back in AISI 304 stainless steel. Base in colaminated steel.
Inner corners:	Rounded for easy cleaning and ensuring maximum hygiene
Handle:	Stainless steel AISI 304, 2 mm thick
Racks and slides:	Stainless steel AISI 304
Feets:	AISI 304 stainless steel adjustable h 100/150 mm
Cosmo:	Predisposed for Cosmo Hub connection

In order to constantly offer the best possible products we reserve the right to make changes on technical specifications without incurring any obligation for equipment previosly or subsequently sold.

COSMO - wi-fi control

Cosmo is The Nice Kitchen's exclusive Wi-Fi technology that allows Coldline, Modular and Nevo appliances to be connected and monitored from a smartphone. The counter, connected with Cosmo kit via cable to a Cosmo hub (MODI, VISION, THAW.PRO, LEVTRONIC, QUBI) or with Cosmo Wi-Fi kit, can be monitored by the CosmoApp and receive alerts in case of abnormal operation.

Technical draw

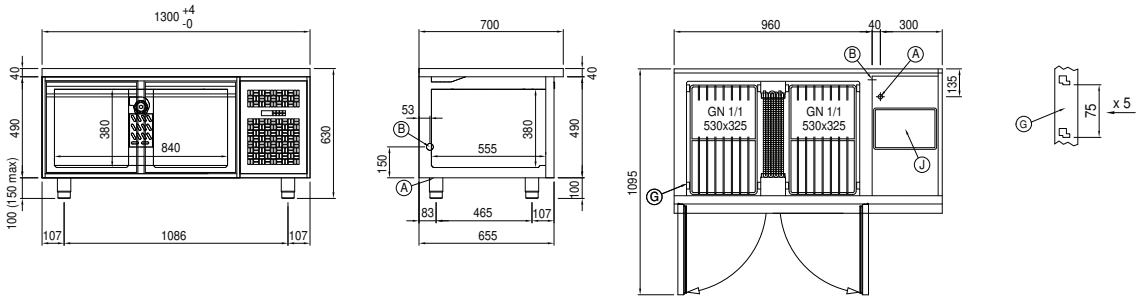

A: Power supply cable outlet

B: Condensation water drain

G: Racks pitch

J: Automatic evaporation of condensing water

In order to constantly offer the best possible products we reserve the right to make changes on technical specifications without incurring any obligation for equipment previosly or subsequently sold.