Client _____ Quantity _____

Project _____ Position _____

Saladette Arkis GN counter 3 doors

Model: HS17/1MDR-760 **Cod:** H80310000212



Technical data

Top:	Without top
Gross capacity:	476 lt
Temperature range:	-2°+8°C
Refrigerant unit:	remote
Cooling gas:	R452a (GWP=2.141)
Defrost:	Electric
Body height:	760 mm
Valve:	Supplied standard with solenoid
Dimensions:	1570×655×860 mm
Packing dimensions:	1875×800×998 mm
Net / gross weight:	109 Kg / 119 Kg
Net / gross volume:	/ 476 lt
Voltage:	220-240 V - 50-60 Hz
Total rate:	810W - 3,7A
Cooling capacity:	668 W*
*:	Evap. -10°C Cond. +55°C

Features

Standard equipment:	3 slides, 3 plastic coated GN1/1 shelves
Control:	Electronic, display flush with the panel
Doors:	3 doors with 180° opening
Door gasket:	Magnetic, triple chamber and easily replaceable
Insulation:	60 mm thickness - CFC/HCFC free
Exterior/interior finishing:	Exterior interior and back in AISI 304 stainless steel. Base in colaminated steel.
Inner corners:	Rounded for easy cleaning and ensuring maximum hygiene
Handle:	Stainless steel AISI 304, 2 mm thick
Racks and slides:	Stainless steel AISI 304
Feets:	AISI 304 stainless steel adjustable h 100/150 mm
Cosmo:	Predisposed for Cosmo Hub connection

In order to constantly offer the best possible products we reserve the right to make changes on technical specifications without incurring any obligation for equipment previosly or subsequently sold.

Remote unit technical data

Voltage:	220-240 V - 50 Hz
Unit total rate :	500W - 2,3A
Cooling gas:	R452A
Gross weight:	16 Kg
Dimensions:	480×330×295 mm
Pipe delivery:	Ø 1/4"
Pipe suction:	Ø 3/8"
Packing dimensions:	540×345×310 mm
Cooling capacity:	Evap. -10°C Cond. +55°C

COSMO - wi-fi control

Cosmo is The Nice Kitchen's exclusive Wi-Fi technology that allows Coldline, Modular and Nevo appliances to be connected and monitored from a smartphone. The counter, connected with Cosmo kit via cable to a Cosmo hub (MODI, VISION, THAW.PRO, LEVTRONIC, QUBI) or with Cosmo Wi-Fi kit, can be monitored by the CosmoApp and receive alerts in case of abnormal operation.

Technical draw

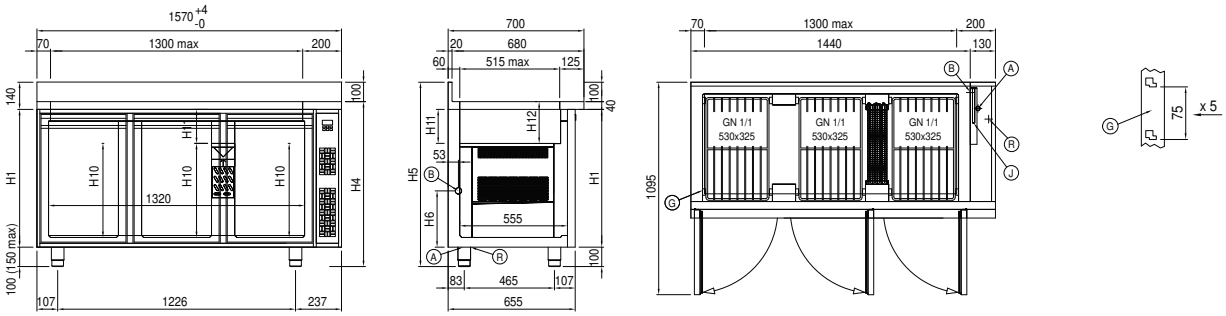

A:	Power supply cable outlet	**B:**	Condensation water drain	**D:**	Airflow conveyor
G:	Racks pitch	**J:**	Automatic evaporation of condensing water	**R:**	Gas output pipes

In order to constantly offer the best possible products we reserve the right to make changes on technical specifications without incurring any obligation for equipment previosly or subsequently sold.