Client _____ Quantity _____

Project _____ Position _____

## Saladette Arkis GN counter 4 doors

**Model:** HP21/1MD-710 **Cod:** H80401000211



### Technical data

| | |
|---|---|
| **Top:** | With top |
| **Gross capacity:** | 599 lt |
| **Temperature range:** | -2°+8°C |
| **Refrigerant unit:** | Plug-in |
| **Cooling gas:** | R290 (GWP=3) |
| **Refrigerant Charge:** | 110g |
| **Defrost:** | Hot gas |
| **Body height:** | 710 mm |
| **Valve:** | Supplied standard with solenoid |
| **Dimensions:** | 2260×700×850 mm |
| **Packing dimensions:** | 2355×800×998 mm |
| **Net / gross weight:** | 195 Kg / 205 Kg |
| **Net / gross volume:** | / 599 lt |
| **Voltage:** | 220-240 V - 50 Hz |
| **Total rate:** | 250W - 1,15A |
| **Cooling capacity:** | 406 W* |
| *: | Evap. -10°C Cond. +55°C |

### Features

| | |
|---|---|
| **Standard equipment:** | 4 slides, 4 plastic coated GN1/1 shelves |
| **Control:** | Electronic, display flush with the panel |
| **Doors:** | 4 doors with 180° opening |
| **Door gasket:** | Magnetic, triple chamber and easily replaceable |
| **Insulation:** | 60 mm thickness - CFC/HCFC free |
| **Exterior/interior finishing:** | Exterior interior and back in AISI 304 stainless steel. Base in colaminated steel. |
| **Inner corners:** | Rounded for easy cleaning and ensuring maximum hygiene |
| **Handle:** | Stainless steel AISI 304, 2 mm thick |
| **Racks and slides:** | Stainless steel AISI 304 |
| **Feets:** | AISI 304 stainless steel adjustable h 100/150 mm |
| **Cosmo:** | Predisposed for Cosmo Hub connection |

In order to constantly offer the best possible products we reserve the right to make changes on technical specifications without incurring any obligation for equipment previosly or subsequently sold.

## COSMO - wi-fi control

Cosmo is The Nice Kitchen's exclusive Wi-Fi technology that allows Coldline, Modular and Nevo appliances to be connected and monitored from a smartphone. The counter, connected with Cosmo kit via cable to a Cosmo hub (MODI, VISION, THAW.PRO, LEVTRONIC, QUBI) or with Cosmo Wi-Fi kit, can be monitored by the CosmoApp and receive alerts in case of abnormal operation.

## Technical draw

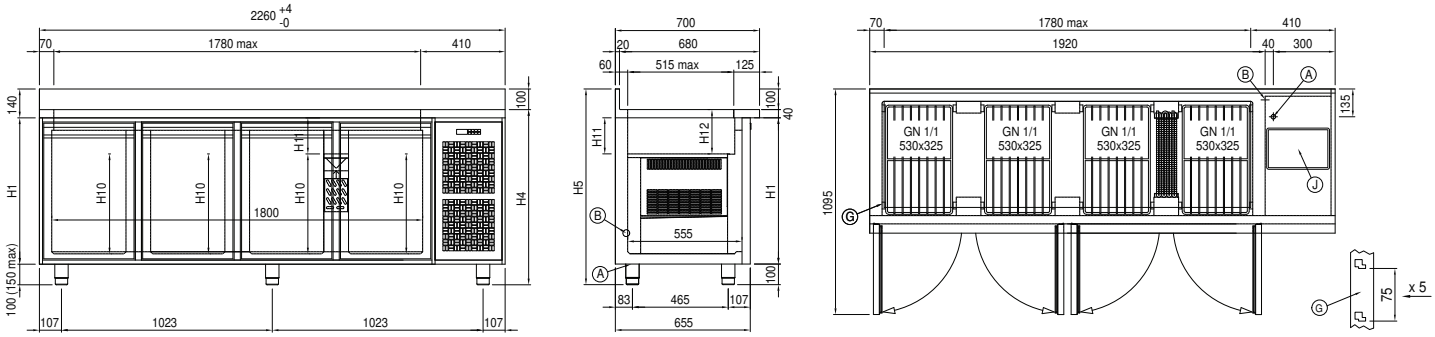


| | | | | | |
|---|---|---|---|---|---|
| **A:** | Power supply cable outlet | **B:** | Condensation water drain | **D:** | Airflow conveyor |
| **G:** | Racks pitch | **J:** | Automatic evaporation of condensing water | | |

In order to constantly offer the best possible products we reserve the right to make changes on technical specifications without incurring any obligation for equipment previosly or subsequently sold.