Client _____ Quantity _____

Project _____ Position _____

Master Combi 700 cabinet

Model: A70/2MB **Cod:** A14070260201



Master refrigerated Combi 700 cabinet, 2 doors, 2 separate compartments with 2 operating temperatures. Plug-in refrigeration unit, 5 heavy duty climatic class and R290 ecological refrigerant gas. Equipment: 2+2 GN2/1 plastic coated shelves, lock with key, led lighting. Temperature range compartment A: -2°+8°C; compartment B: -18°-22°C; ventilated refrigeration. Anti-corrosion treated evaporator, hot gas defrost. 75 mm insulation thickness - HFO with high insulation performance and low environmental impact (CFC, HCFC, HFC free). AISI 304 stainless steel handle and magnetic triple chamber door gasket, easily replaceable. Reversible, self-closing door opening with 105° stop. One-piece structure, interior/exterior AISI 304 stainless steel; outside back, external base and inside technical compartment in galvanised/colaminated steel. Rounded inner corners for easy cleaning. The reinforced modular base in colaminated steel allows installation on wheels, feet, mobile or masonry plinths. Replaceable refrigerant system FSS - Fast Service System - for quick and easy service. Predisposed for connection to Cosmo remote supervision system and ModBus/RTU Rs485 connection.

Technical data

Gross capacity:	562 lt
Temperature range:	-2°+8°C/-18°-22°C
Refrigerant unit:	Plug-in
Climate class:	5
Cooling gas:	R290 (GWP=3)
Refrigerant Charge:	90g
Defrost:	Hot gas
Valve:	Supplied standard with solenoid
Dimensions:	740×815×2085 mm
Packing dimensions:	835×930×2145 mm
Net / gross weight:	170 Kg / 190 Kg
Net / gross volume:	173+173 lt / 562 lt
Voltage:	220-240 V - 50 Hz
Total rate:	720W - 3,3A
Cooling capacity:	406 W*
Cooling capacity 2:	356 W*
*:	Evap. -10°C/-30°C Cond. +55°C

Features

Standard equipment:	4 slides for GN2/1 shelves, 4 plastic coated GN2/1 shelves, lock with key, LED lighting
Control:	Electronic, display flush with the panel
Doors:	2 sportelli, autochiudenti con fermo a 105°, cerniere a destra
Door gasket:	Magnetic, triple chamber and easily replaceable
Insulation:	75 mm thickness - CFC/HCFC free
Exterior/interior finishing:	Exterior and interior AISI 304 stainless steel. Back, base and internal technical compartment in galvanized/colaminated steel.
Inner corners:	Rounded for easy cleaning and ensuring maximum hygiene
Handle:	Stainless steel AISI 304, 2 mm thick
Racks and slides:	Stainless steel AISI 304
Feets:	AISI 304 stainless steel adjustable h 100/150 mm
Cosmo:	Predisposed for Cosmo Hub connection

In order to constantly offer the best possible products we reserve the right to make changes on technical specifications without incurring any obligation for equipment previosly or subsequently sold.

Accessories and variants

Alimentazione frequenza 60Hz	Stainless steel shelf GN2/1
Other special voltage	Plastic coated shelf GN2/1
Frame for fixed masonry plinth	Pair of type C slides 605 mm
RAL customisable colouring	Stainless steel drawer, h 150 mm 700/1400
Master Marine solutions	Bottles shelf, stainless steel coating for shelf 700/1400
Predisposition for connection to CO2 remote control unit	Serial interface, RS485 cable
Plug-in water unit	Cosmo cable connection kit
4 Swivel and brake castors h 128 mm	Cosmo wifi connection kit

COSMO - wi-fi control

Cosmo is The Nice Kitchen's exclusive Wi-Fi technology that allows Coldline, Modular and Nevo appliances to be connected and monitored from a smartphone. The cabinet, connected with Cosmo kit via cable to a Cosmo hub (MODI, VISION, THAW.PRO, LEVTRONIC, QUBI) or with Cosmo Wi-Fi kit, can be monitored by the CosmoApp and receive alerts in case of abnormal operation.

Technical draw

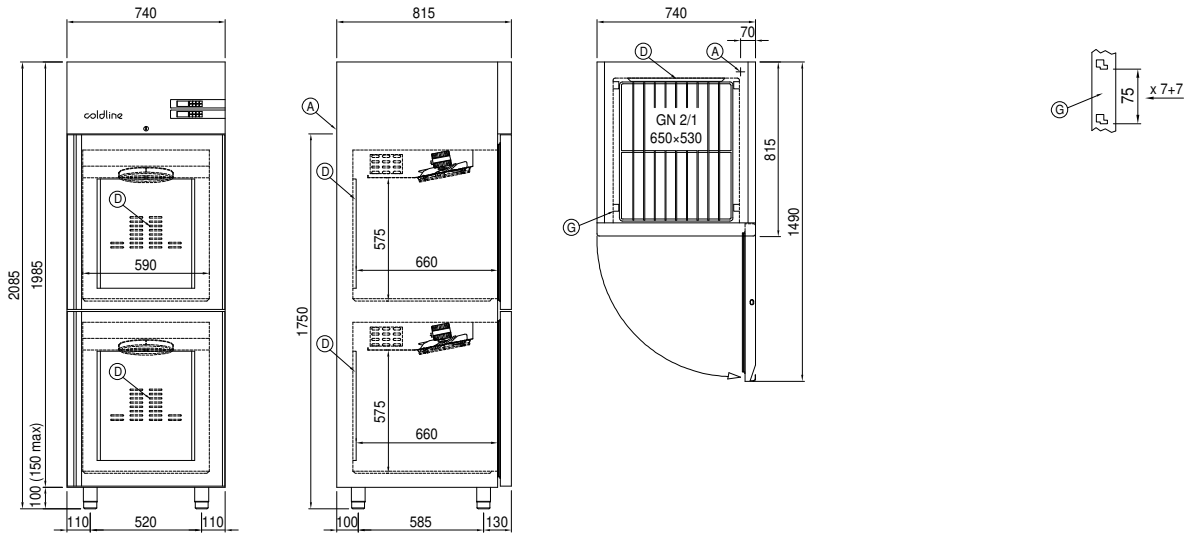

A: Power supply cable outlet

D: Airflow conveyor

G: Racks pitch

In order to constantly offer the best possible products we reserve the right to make changes on technical specifications without incurring any obligation for equipment previosly or subsequently sold.