Client _____ Quantity _____

Project _____ Position _____

# Master Fish Combi 700 cabinet

**Model:** A70/2PB **Cod:** A14070360201



Armadio refrigerato Master Fish Combi 700, 2 porte, 2 vani separati con 2 temperature di funzionamento. Unità refrigerante plug-in, classe climatica 5 heavy duty e gas refrigerante ecologico R290. Dotazione: 2 griglie plastificate GN2/1 e 4 vaschette pesce ABS GN1/1 con falsofondo interno, serratura con chiave, illuminazione led, piletta di scolo. Range di temperatura vano A: -6°+4°C; vano B: -18°-22°C; refrigerazione ventilata. Evaporatore trattato anticorrosione, sbrinamento a gas caldo. Spessore dell'isolamento 75 mm - HFO con elevate prestazioni isolanti e basso impatto ambientale (senza CFC, HCFC, HFC). Maniglia in acciaio inox AISI 304 e guarnizione magnetica della porta a tripla camera, facilmente sostituibile. Apertura porta reversibile, autochiudente con fermo a 105°. Struttura monoscocca, interno/esterno in acciaio inox AISI 304; schiena esterna, fondo esterno e interno vano tecnico in acciaio galvanizzato/colaminato. Angoli interni arrotondati per una facile pulizia. La base modulare rinforzata in acciaio colaminato consente l'installazione su ruote, piedini, zoccolo fisso o mobile. Sistema refrigerante sostituibile FSS - Fast Service System - per un service facile e veloce. Predisposto per collegamento a sistema di supervisione remoto Cosmo e connessione ModBus/RTU Rs485.

## Technical data

| | |
|---|---|
| **Gross capacity:** | 562 lt |
| **Temperature range:** | -6°+4°C/-18°-22°C |
| **Refrigerant unit:** | Plug-in |
| **Climate class:** | 5 |
| **Cooling gas:** | R290 (GWP=3) |
| **Refrigerant Charge:** | 90g |
| **Defrost:** | Hot gas |
| **Valve:** | Supplied standard with solenoid |
| **Dimensions:** | 740×815×2085 mm |
| **Packing dimensions:** | 835×930×2145 mm |
| **Net / gross weight:** | 170 Kg / 190 Kg |
| **Net / gross volume:** | 345 lt / 562 lt |
| **Voltage:** | 220-240 V - 50 Hz |
| **Total rate:** | 720W - 3,3A |
| **Cooling capacity:** | 406 W* |
| **Cooling capacity 2:** | 356 W* |
| *: | Evap. -10°C/-30°C Cond. +55°C |

## Features

| | |
|---|---|
| **Standard equipment:** | 4 slides for GN2/1 shelves, 2 plastic coated GN2/1 shelves, 4 abs GN1/1 pans, lock with key, LED lighting, water drain |
| **Control:** | Electronic, display flush with the panel |
| **Doors:** | 2 sportelli, autochiudenti con fermo a 105°, cerniere a destra |
| **Door gasket:** | Magnetic, triple chamber and easily replaceable |
| **Insulation:** | 75 mm thickness - CFC/HCFC free |
| **Exterior/interior finishing:** | Exterior and interior AISI 304 stainless steel. Back, base and internal technical compartment in galvanized/colaminated steel. |
| **Inner corners:** | Rounded for easy cleaning and ensuring maximum hygiene |
| **Handle:** | Stainless steel AISI 304, 2 mm thick |
| **Racks and slides:** | Stainless steel AISI 304 |
| **Feets:** | AISI 304 stainless steel adjustable h 100/150 mm |
| **Cosmo:** | Predisposed for Cosmo Hub connection |

In order to constantly offer the best possible products we reserve the right to make changes on technical specifications without incurring any obligation for equipment previosly or subsequently sold.

## Accessories and variants

- Alimentazione frequenza 60Hz
- Other special voltage
- Frame for fixed masonry plinth
- RAL customisable colouring
- Master Marine solutions
- Predisposition for connection to CO2 remote control unit
- 4 Swivel and brake castors h 128 mm
- Stainless steel shelf GN2/1
- Plastic coated shelf GN2/1
- Pair of type C slides 605 mm
- Stainless steel drawer, h 150 mm 700/1400
- Bottles shelf, stainless steel coating for shelf 700/1400
- Serial interface, RS485 cable
- Cosmo cable connection kit
- Cosmo wifi connection kit
- ABS fish pan GN1/1 with perforated false bottom 2 pieces

## COSMO - wi-fi control

Cosmo is The Nice Kitchen's exclusive Wi-Fi technology that allows Coldline, Modular and Nevo appliances to be connected and monitored from a smartphone. The cabinet, connected with Cosmo kit via cable to a Cosmo hub (MODI, VISION, THAW.PRO, LEVTRONIC, QUBI) or with Cosmo Wi-Fi kit, can be monitored by the CosmoApp and receive alerts in case of abnormal operation.

## Technical draw

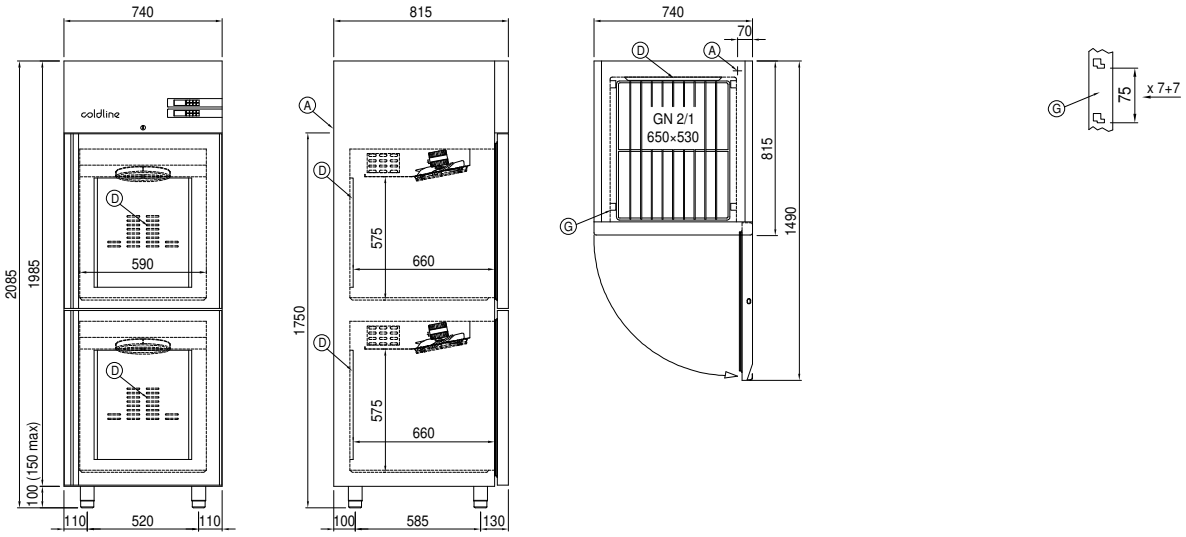


**A:** Power supply cable outlet

**D:** Airflow conveyor

**G:** Racks pitch

**P:** Water drain

In order to constantly offer the best possible products we reserve the right to make changes on technical specifications without incurring any obligation for equipment previosly or subsequently sold.