Client _____ Quantity _____

Project _____ Position _____

Master GN counter 4 doors

Model: TP21/1M-710 **Cod:** T10401000201

Master refrigerated counter 4 doors, counter body height 710 mm, with top. Plug-in refrigeration unit, B energetic class, 5 heavy duty climatic class and R290 ecological refrigerant gas. Temperature range -2°+8°C with ventilated refrigeration. Equipment: 1 GN1/1 plastic coated shelf. Each compartment can be configured with 1/2+1/2, 1/3+2/3, 1/3+1/3+1/3 drawers. Anti-corrosion treated evaporator and hot gas defrosting. 60 mm insulation thickness - HFO with high insulation performance and low environmental impact (CFC, HCFC, HFC free). AISI 304 stainless steel handle and magnetic triple chamber door gasket, easily replaceable. Reversible, self-closing door opening with 105° stop. AISI 304 stainless steel interior/exterior including external back. Rounded inner corners for easy cleaning. The reinforced modular base in colaminated steel allows installation on wheels, feet, mobile or masonry plinths. Replaceable refrigerant system FSS - Fast Service System - for quick and easy service. Prepared for connection to Cosmo - wi-fi remote supervision system - and ModBus/RTU Rs485 connection.



Technical data

Top:	With top
Gross capacity:	599 lt
Temperature range:	-2°+8°C
Refrigerant unit:	Plug-in
Energetic class:	B
Energy efficiency index:	30,7
Annual consumption:	836 kW/h annum
24h consumption:	2,29 kW/h/24h
Climate class:	5
Cooling gas:	R290 (GWP=3)
Refrigerant Charge:	110g
Defrost:	Hot gas
Body height:	710 mm
Valve:	Supplied standard with solenoid
Dimensions:	2260×700×850 mm
Packing dimensions:	2355×800×1010 mm
Net / gross weight:	200 Kg / 210 Kg
Net / gross volume:	365 lt / 599 lt
Voltage:	220-240 V - 50 Hz
Total rate:	250W - 1,15A
Cooling capacity:	406 W*
*:	Evap. -10°C Cond. +55°C

Features

Standard equipment:	4 slides, 4 plastic coated GN1/1 shelves
Control:	Electronic, display flush with the panel
Doors:	4 doors, self-closing, reversible with 105° stop
Door gasket:	Magnetic, triple chamber and easily replaceable
Insulation:	60 mm thickness - CFC/HCFC free
Exterior/interior finishing:	Exterior interior and back in AISI 304 stainless steel. Base in colaminated steel.
Inner corners:	Rounded for easy cleaning and ensuring maximum hygiene
Handle:	Stainless steel AISI 304, 2 mm thick
Racks and slides:	Stainless steel AISI 304
Feets:	AISI 304 stainless steel adjustable h 100/150 mm
Cosmo:	Predisposed for Cosmo Hub connection

In order to constantly offer the best possible products we reserve the right to make changes on technical specifications without incurring any obligation for equipment previosly or subsequently sold.

Accessories and variants

Drawers 1/2	Granite flat worktop
Drawers 1/3	Granite worktop with splashback
Drawers 1/3 + 2/3	Service water sink Ø 300 mm
Special counter body heights 650 mm	Single lever mixer hole Ø 3/4
Special counter body heights 700 mm	Adjustable feet h 145/195 mm
Special counter body heights 750 mm	6 Swivel and brake castors h 128 mm
Technical compartment on the left	Brackets for GN pans for drawer
Lock with key for drawer 1/2	GN1/2 container + lids kit for drawer, h 150 mm
Lock with key for drawer 1/3	GN1/3 container + lids kit for drawer, h 150 mm
Lock with key for drawer 1/3 + 2/3	Bottles shelf, stainless steel coating for shelf 350
Glass door	Stainless steel shelf GN1/1
LED lighting	Plastic coated shelf GN1/1
RAL customisable colouring	Pair of type C slides 505 mm
Plug-in water unit	Serial interface, RS485 cable
Stainless steel evaporator	Cosmo cable connection kit
Alimentazione frequenza 60Hz	Cosmo wifi connection kit
Other special voltage	IP44 schuko socket with cover
Internal hygiene H3	Removable plinth GN 4D h 100 mm

COSMO - wi-fi control

Cosmo is The Nice Kitchen's exclusive Wi-Fi technology that allows Coldline, Modular and Nevo appliances to be connected and monitored from a smartphone. The counter, connected with Cosmo kit via cable to a Cosmo hub (MODI, VISION, THAW.PRO, LEVTRONIC, QUBI) or with Cosmo Wi-Fi kit, can be monitored by the CosmoApp and receive alerts in case of abnormal operation.

Technical draw

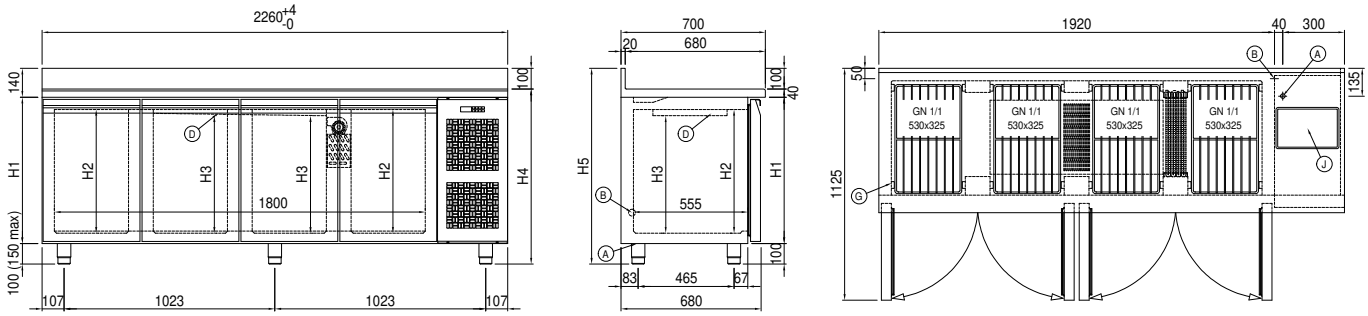

A: Power supply cable outlet

B: Condensation water drain

D: Airflow conveyor

G: Racks pitch

J: Automatic evaporation of condensing water

In order to constantly offer the best possible products we reserve the right to make changes on technical specifications without incurring any obligation for equipment previosly or subsequently sold.