Client _____ Quantity _____

Project _____ Position _____

Smart GN counter 2 doors

Model: TA13/1ME-710 **Cod:** T11202000201

Smart refrigerated counter 2 doors, counter body height 710 mm, top with splashback. Plug-in refrigeration unit, A energetic class, 5 heavy duty climatic class and R290 ecological refrigerant gas. Temperature range -2°+8°C with ventilated refrigeration. Equipment: 1 GN1/1 plastic coated shelf. Each compartment can be configured with 1/2+1/2, 1/3+2/3, 1/3+1/3+1/3 drawers. Anti-corrosion treated evaporator and hot gas defrosting. 60 mm insulation thickness - HFO with high insulation performance and low environmental impact (CFC, HCFC, HFC free). PVC handle and magnetic triple chamber door gasket, easily replaceable. Reversible, self-closing door opening with 105° stop. Interior/exterior AISI 304 stainless steel; external back and base in colaminated steel. Rounded inner corners for easy cleaning. The reinforced modular base in colaminated steel allows installation on wheels, feet, mobile or masonry plinths. Replaceable refrigerant system FSS - Fast Service System - for quick and easy service. Prepared for connection to Cosmo - wi-fi remote supervision system - and ModBus/RTU Rs485 connection.



Technical data

Top:	With top and splashback
Gross capacity:	280 lt
Temperature range:	-2°+8°C
Refrigerant unit:	Plug-in
Energetic class:	A
Energy efficiency index:	23,3
Annual consumption:	527 kW/h annum
24h consumption:	1,444 kW/h/24h
Climate class:	5
Cooling gas:	R290 (GWP=3)
Refrigerant Charge:	110g
Defrost:	Hot gas
Body height:	710 mm
Valve:	Supplied standard with solenoid
Dimensions:	1300×700×950 mm
Packing dimensions:	1395×800×1010 mm
Net / gross weight:	120 Kg / 130 Kg
Net / gross volume:	183 lt / 280 lt
Voltage:	220-240 V - 50 Hz
Total rate:	250W - 1,15A
Cooling capacity:	406 W*
*:	Evap. -10°C Cond. +55°C

Features

Standard equipment:	2 slides, 2 plastic coated GN1/1 shelves
Control:	Electronic, display flush with the panel
Doors:	2 doors, self-closing, reversible with 105° stop
Door gasket:	Magnetic, triple chamber and easily replaceable
Insulation:	60 mm thickness - CFC/HCFC free
Exterior/interior finishing:	Exterior and interior AISI 304 stainless steel. Back and base in colaminated steel.
Inner corners:	Rounded for easy cleaning and ensuring maximum hygiene
Handle:	In PVC
Racks and slides:	Stainless steel AISI 304
Feets:	AISI 304 stainless steel adjustable h 100/150 mm
Cosmo:	Predisposed for Cosmo Hub connection

In order to constantly offer the best possible products we reserve the right to make changes on technical specifications without incurring any obligation for equipment previosly or subsequently sold.

Accessories and variants

Drawers 1/2	Brackets for GN pans for drawer
Drawers 1/3	GN1/2 container + lids kit for drawer, h 150 mm
Drawers 1/3 + 2/3	GN1/3 container + lids kit for drawer, h 150 mm
Alimentazione frequenza 60Hz	Stainless steel shelf GN1/1
Other special voltage	Plastic coated shelf GN1/1
Service water sink Ø 300 mm	Pair of type C slides 505 mm
Single lever mixer hole Ø 3/4	Serial interface, RS485 cable
Adjustable feet h 145/195 mm	Cosmo cable connection kit
4 Swivel and brake castors h 128 mm	Cosmo wifi connection kit

COSMO - wi-fi control

Cosmo is The Nice Kitchen's exclusive Wi-Fi technology that allows Coldline, Modular and Nevo appliances to be connected and monitored from a smartphone. The counter, connected with Cosmo kit via cable to a Cosmo hub (MODI, VISION, THAW.PRO, LEVTRONIC, QUBI) or with Cosmo Wi-Fi kit, can be monitored by the CosmoApp and receive alerts in case of abnormal operation.

Technical draw

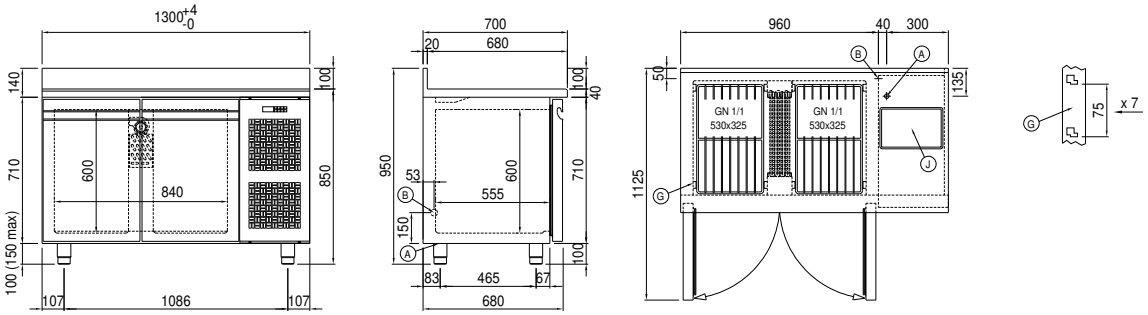

A: Power supply cable outlet

B: Condensation water drain

G: Racks pitch

J: Automatic evaporation of condensing water

In order to constantly offer the best possible products we reserve the right to make changes on technical specifications without incurring any obligation for equipment previosly or subsequently sold.