Client _____ Quantity _____

Project _____ Position _____

Master 650 cabinet

Model: A80/1NUV **Cod:** A14080100601



Master 650 refrigerated cabinet, 1 glass door. Plug-in refrigeration unit, E energetic class, 4 climatic class and R290 ecological refrigerant gas. Equipment: 3 GN2/1 plastic coated shelves, lock with key, led strip lighting. Temperature range 0°+10°C; ventilated refrigeration. Anti-corrosion treated evaporator, off cycle automatic defrost. 75 mm insulation thickness - HFO with high insulation performance and low environmental impact (CFC, HCFC, HFC free). Black plastic handle and magnetic triple chamber door gasket, easily replaceable. Reversible, self-closing door opening with 105° stop. One-piece structure, interior/exterior AISI 304 stainless steel; outside back, external base and inside technical compartment in galvanised/colaminated steel. Rounded inner corners for easy cleaning. The reinforced modular base in colaminated steel allows installation on wheels, feet, mobile or masonry plinths. Replaceable refrigerant system FSS - Fast Service System - for quick and easy service. Predisposed for connection to Cosmo remote supervision system and ModBus/RTU Rs485 connection.

Technical data

Gross capacity:	573 lt
Temperature range:	0°+10°C
Refrigerant unit:	Plug-in
Energetic class:	E
Energy efficiency index:	84,4
Annual consumption:	1138 kW/h annum
24h consumption:	3,117 kW/h/24h
Climate class:	4
Cooling gas:	R290 (GWP=3)
Refrigerant Charge:	110g
Defrost:	Off cycle automatic
Valve:	Supplied standard with solenoid
Dimensions:	810×715×2085 mm
Packing dimensions:	905×830×2145 mm
Net / gross weight:	145 Kg / 165 Kg
Net / gross volume:	450 lt / 573 lt
Voltage:	220-240 V - 50 Hz
Total rate:	280W - 1,3A
Cooling capacity:	668 W*
*:	Evap. -10°C Cond. +55°C

Features

Standard equipment:	3 slides for GN2/1 shelves, 3 plastic coated GN2/1 shelves, lock with key, LED lighting
Control:	Electronic, display flush with the panel
Doors:	1 aluminium door, self-closing with 105° latch, right-hand hinges
Door gasket:	Magnetic, triple chamber and easily replaceable
Insulation:	75 mm thickness - CFC/HCFC free
Exterior/interior finishing:	Exterior and interior AISI 304 stainless steel. Back, base and internal technical compartment in galvanized/colaminated steel.
Inner corners:	Rounded for easy cleaning and ensuring maximum hygiene
Handle:	Stainless steel AISI 304, 2 mm thick
Racks and slides:	Stainless steel AISI 304
Feets:	AISI 304 stainless steel adjustable h 100/150 mm
Cosmo:	Predisposed for Cosmo Hub connection

In order to constantly offer the best possible products we reserve the right to make changes on technical specifications without incurring any obligation for equipment previosly or subsequently sold.

Accessories and variants

- Alimentazione frequenza 60Hz
- Other special voltage
- Half doors
- Frame for fixed masonry plinth
- RAL customisable colouring
- Master Marine solutions
- Predisposition for connection to CO2 remote control unit
- Foot pedal kit
- 4 Swivel and brake castors h 128 mm
- Pair of type C slides 505 mm
- Stainless steel shelf GN2/1
- Plastic coated shelf GN2/1
- Pair of type C slides 605 mm
- Serial interface, RS485 cable
- Cosmo cable connection kit
- Cosmo wifi connection kit

COSMO - wi-fi control

Cosmo is The Nice Kitchen's exclusive Wi-Fi technology that allows Coldline, Modular and Nevo appliances to be connected and monitored from a smartphone. The cabinet, connected with Cosmo kit via cable to a Cosmo hub (MODI, VISION, THAW.PRO, LEVTRONIC, QUBI) or with Cosmo Wi-Fi kit, can be monitored by the CosmoApp and receive alerts in case of abnormal operation.

Technical draw

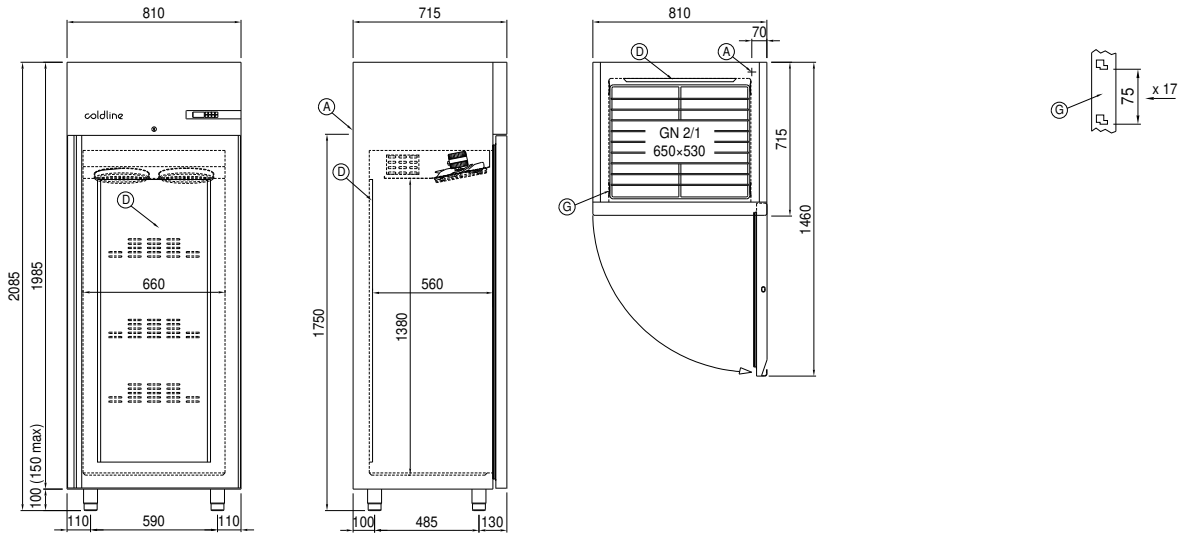

A: Power supply cable outlet

D: Airflow conveyor

G: Racks pitch

In order to constantly offer the best possible products we reserve the right to make changes on technical specifications without incurring any obligation for equipment previosly or subsequently sold.