Client _____ Quantity _____

Project _____ Position _____

# Master 650 cabinet

**Model:** A80/1BUV **Cod:** A14080600601



Master 650 refrigerated cabinet, 1 glass door. Plug-in refrigeration unit, D energetic class, 4 climatic class and R290 ecological refrigerant gas. Equipment: 3 GN2/1 plastic coated shelves, lock with key, led strip lighting. Temperature range -18°-22°C; ventilated refrigeration. Anti-corrosion treated evaporator, hot gas defrost. 75 mm insulation thickness - HFO with high insulation performance and low environmental impact (CFC, HCFC, HFC free). Black plastic handle and magnetic triple chamber door gasket, easily replaceable. Reversible, self-closing door opening with 105° stop. One-piece structure, interior/exterior AISI 304 stainless steel; outside back, external base and inside technical compartment in galvanised/colaminated steel. Rounded inner corners for easy cleaning. The reinforced modular base in colaminated steel allows installation on wheels, feet, mobile or masonry plinths. Replaceable refrigerant system FSS - Fast Service System - for quick and easy service. Predisposed for connection to Cosmo remote supervision system and ModBus/RTU Rs485 connection.

## Technical data

| | |
|---|---|
| **Gross capacity:** | 573 lt |
| **Temperature range:** | -18°-22°C |
| **Refrigerant unit:** | Plug-in |
| **Energetic class:** | D |
| **Energy efficiency index:** | 68 |
| **Annual consumption:** | 2510 kW/h annum |
| **24h consumption:** | 6,876 kW/h/24h |
| **Climate class:** | 4 |
| **Cooling gas:** | R290 (GWP=3) |
| **Refrigerant Charge:** | 150g |
| **Defrost:** | Hot gas |
| **Valve:** | Supplied standard with solenoid |
| **Dimensions:** | 810×715×2085 mm |
| **Packing dimensions:** | 905×830×2145 mm |
| **Net / gross weight:** | 160 Kg / 180 Kg |
| **Net / gross volume:** | 450 lt / 573 lt |
| **Voltage:** | 220-240 V - 50 Hz |
| **Total rate:** | 1000W - 4,6A |
| **Cooling capacity:** | 692 W* |
| *: | Evap. -30°C Cond. +55°C |

## Features

| | |
|---|---|
| **Standard equipment:** | 3 slides for GN2/1 shelves, 3 plastic coated GN2/1 shelves, lock with key, LED lighting |
| **Control:** | Electronic, display flush with the panel |
| **Doors:** | 1 aluminium door, self-closing with 105° latch, right-hand hinges |
| **Door gasket:** | Magnetic, triple chamber and easily replaceable |
| **Insulation:** | 75 mm thickness - CFC/HCFC free |
| **Exterior/interior finishing:** | Exterior and interior AISI 304 stainless steel. Back, base and internal technical compartment in galvanized/colaminated steel. |
| **Inner corners:** | Rounded for easy cleaning and ensuring maximum hygiene |
| **Handle:** | Stainless steel AISI 304, 2 mm thick |
| **Racks and slides:** | Stainless steel AISI 304 |
| **Feets:** | AISI 304 stainless steel adjustable h 100/150 mm |
| **Cosmo:** | Predisposed for Cosmo Hub connection |

In order to constantly offer the best possible products we reserve the right to make changes on technical specifications without incurring any obligation for equipment previosly or subsequently sold.

## Accessories and variants

| | |
|---|---|
| Alimentazione frequenza 60Hz | Foot pedal kit |
| Other special voltage | 4 Swivel and brake castors h 128 mm |
| Half doors | Pair of type C slides 505 mm |
| Frame for fixed masonry plinth | Stainless steel shelf GN2/1 |
| RAL customisable colouring | Plastic coated shelf GN2/1 |
| Master Marine solutions | Pair of type C slides 605 mm |
| Predisposition for connection to CO2 remote control unit | Serial interface, RS485 cable |
| Plug-in water unit | Cosmo cable connection kit |

## COSMO - wi-fi control

Cosmo is The Nice Kitchen's exclusive Wi-Fi technology that allows Coldline, Modular and Nevo appliances to be connected and monitored from a smartphone. The cabinet, connected with Cosmo kit via cable to a Cosmo hub (MODI, VISION, THAW.PRO, LEVTRONIC, QUBI) or with Cosmo Wi-Fi kit, can be monitored by the CosmoApp and receive alerts in case of abnormal operation.

## Technical draw

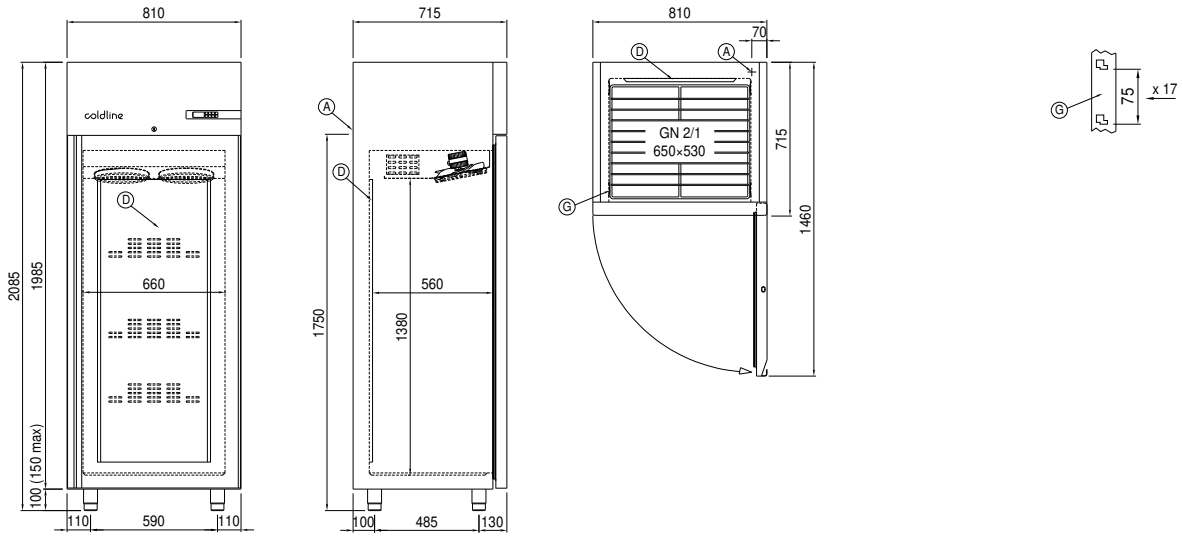


**A:** Power supply cable outlet

**D:** Airflow conveyor

**G:** Racks pitch

In order to constantly offer the best possible products we reserve the right to make changes on technical specifications without incurring any obligation for equipment previosly or subsequently sold.