Client _____ Quantity _____

Project _____ Position _____

Master 650 cabinet

Model: A80/1NURV **Cod:** A14081100601



Master 650 refrigerated cabinet, 1 glass door. Remote refrigeration unit, 4 climatic class and R452a refrigerant gas. Equipment: 3 GN2/1 plastic coated shelves, lock with key, led strip lighting. Temperature range 0°+10°C; ventilated refrigeration. Anti-corrosion treated evaporator, off cycle automatic defrost. 75 mm insulation thickness - HFO with high insulation performance and low environmental impact (CFC, HCFC, HFC free). Black plastic handle and magnetic triple chamber door gasket, easily replaceable. Reversible, self-closing door opening with 105° stop. One-piece structure, interior/exterior AISI 304 stainless steel; outside back, external base and inside technical compartment in galvanised/colaminated steel. Rounded inner corners for easy cleaning. The reinforced modular base in colaminated steel allows installation on wheels, feet, mobile or masonry plinths. Replaceable refrigerant system FSS - Fast Service System - for quick and easy service. Predisposed for connection to Cosmo remote supervision system and ModBus/RTU Rs485 connection.

Technical data

Gross capacity:	573 lt
Temperature range:	0°+10°C
Refrigerant unit:	remote
Cooling gas:	R452a (GWP=2.141)
Defrost:	Off cycle automatic
Valve:	Supplied standard with solenoid
Dimensions:	810×715×2085 mm
Packing dimensions:	905×830×2145 mm
Net / gross weight:	130 Kg / 140 Kg
Net / gross volume:	450 lt / 573 lt
Voltage:	220-240 V - 50-60 Hz
Total rate:	850W - 3,9A
Cooling capacity:	668 W*
*:	Evap. -10°C Cond. +55°C

Features

Standard equipment:	3 slides for GN2/1 shelves, 3 plastic coated GN2/1 shelves, lock with key, LED lighting
Control:	Electronic, display flush with the panel
Doors:	1 aluminium door, self-closing with 105° latch, right-hand hinges
Door gasket:	Magnetic, triple chamber and easily replaceable
Insulation:	75 mm thickness - CFC/HCFC free
Exterior/interior finishing:	Exterior and interior AISI 304 stainless steel. Back, base and internal technical compartment in galvanized/colaminated steel.
Inner corners:	Rounded for easy cleaning and ensuring maximum hygiene
Handle:	Stainless steel AISI 304, 2 mm thick
Racks and slides:	Stainless steel AISI 304
Feets:	AISI 304 stainless steel adjustable h 100/150 mm
Cosmo:	Predisposed for Cosmo Hub connection

In order to constantly offer the best possible products we reserve the right to make changes on technical specifications without incurring any obligation for equipment previosly or subsequently sold.

Accessories and variants

Alimentazione frequenza 60Hz	Foot pedal kit
Other special voltage	4 Swivel and brake castors h 128 mm
Half doors	Pair of type C slides 505 mm
Frame for fixed masonry plinth	Stainless steel shelf GN2/1
RAL customisable colouring	Plastic coated shelf GN2/1
Master Marine solutions	Pair of type C slides 605 mm
Predisposition for connection to CO2 remote control unit	Serial interface, RS485 cable
Remote condensing unit NEK6210GK	Cosmo cable connection kit

Remote unit technical data

Voltage:	220-240 V - 50 Hz
Unit total rate :	500W - 2,3A
Cooling gas:	R452A
Gross weight:	16 Kg
Dimensions:	480×330×295 mm
Pipe delivery:	Ø 1/4"
Pipe suction:	Ø 3/8"
Packing dimensions:	540×345×310 mm
Cooling capacity:	Evap. -10°C Cond. +55°C

COSMO - wi-fi control

Cosmo is The Nice Kitchen's exclusive Wi-Fi technology that allows Coldline, Modular and Nevo appliances to be connected and monitored from a smartphone. The cabinet, connected with Cosmo kit via cable to a Cosmo hub (MODI, VISION, THAW.PRO, LEVTRONIC, QUBI) or with Cosmo Wi-Fi kit, can be monitored by the CosmoApp and receive alerts in case of abnormal operation.

Technical draw

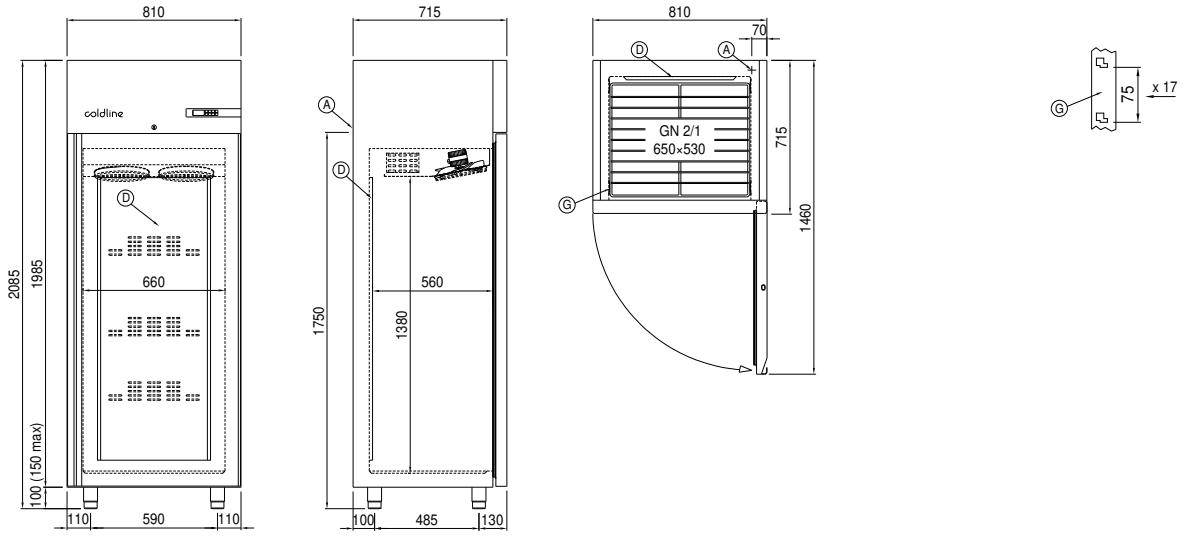

A: Power supply cable outlet

D: Airflow conveyor

G: Racks pitch

J: Automatic evaporation of condensing water

In order to constantly offer the best possible products we reserve the right to make changes on technical specifications without incurring any obligation for equipment previosly or subsequently sold.