Client _____ Quantity _____

Project _____ Position _____

Vision F80 cabinet

Model: AF80/2M **Cod:** A64800800201



Vision AF80 retarder prover cabinet, 2 doors, temperature range -6°+40°C. It is equipped with the functions: retarded proving, manual proving, continuous cycle, storage, thawing, chocolate. Plug-in refrigeration unit, E energetic class, 5 heavy duty climatic class and R290 ecological refrigerant gas. Hot gas defrost, adjustable ventilation 25-100% and adjustable humidity 45-95%. Water purification filter. 7" touch screen and operating mode with customisable recipes. Equipment: 20 EN60x80 pairs of slides, led strip lighting, water drain, Electronic expansion valve and anti-corrosion painted evaporator. 100 mm insulation thickness - HFO with high insulation performance and low environmental impact (CFC, HCFC, HFC free). AISI 304 stainless steel handles and magnetic triple chamber door gaskets, easily replaceable. Interior/exterior AISI 304 stainless steel; external back, external bottom and internal technical compartment in galvanized/colaminated steel. 2 compressors and 2 independent refrigeration circuits. Cosmo: wi-fi connection for remote monitoring via Cosmo App. When wired to Coldline counters and cabinets acts as a hub for remote monitoring of connected equipment.

Technical data

Max capacity:	40 trays EN60x80 h 20 mm
Gross capacity:	1057 lt
Temperature range:	-6°+40°C
Ventilation range:	25% - 100%
Humidity range:	45% - 95% with humidifier
Humidifier:	Including
Refrigerant unit:	Plug-in
Energetic class:	E
Energy efficiency index:	84,8
Annual consumption:	1602 kW/h annum
24h consumption:	4,389 kW/h/24h
Climate class:	5
Cooling gas:	R290 (GWP=3)
Refrigerant Charge:	90g+90g
Defrost:	Hot gas
Valve:	Supplied standard with solenoid
Dimensions:	900×1138×2465 mm
Packing dimensions:	920×1100×2530 mm
Net / gross weight:	280 Kg / 290 Kg
Net / gross volume:	780 lt / 1057 lt
Voltage:	220-240 V - 50 Hz
Total rate:	1740W - 8,0A
Cooling capacity:	1336 W*
*:	Evap. -10°C Cond. +55°C

Features

Functions:	Retarder prover, manual proving, continuous cycle, storage, chocolate, thawing, ice cream
Standard equipment:	20 slides for EN60x80 trays, LED lighting
Control:	7" touch screen display with USB port
Doors:	2 doors, self-closing with a 105° stop, right hinged
Door gasket:	Magnetic, triple chamber and easily replaceable
Insulation:	100 mm thickness - CFC/HCFC free
Exterior/interior finishing:	Exterior and interior AISI 304 stainless steel. Back, base and internal technical compartment in galvanized/colaminated steel.
Inner corners:	Rounded for easy cleaning and ensuring maximum hygiene
Handle:	In AISI 304 stainless steel
Racks and slides:	Stainless steel AISI 304
Feets:	AISI 304 stainless steel adjustable h 100/150 mm
Cosmo:	Wi-Fi remote control system

In order to constantly offer the best possible products we reserve the right to make changes on technical specifications without incurring any obligation for equipment previosly or subsequently sold.

Accessories and variants

RAL customisable colouring	4 Swivel and brake castors h 128 mm
Plug-in water unit	Aluminium coated backingan EN60x40 h 20 mm
Alimentazione frequenza 60Hz	Stainless steel shelf EN60x40
Other special voltage	Plastic coated shelf EN60x40
Purity C Quell ST 50 filter cartridge	Pair of type L slides 755 mm EN60x80

COSMO - wi-fi control

Cosmo is The Nice Kitchen's exclusive Wi-Fi technology that allows VISION retarder provers to be connected, updated and monitored from smartphones. VISION is also a Cosmo hub and allows remote supervision of the Coldline appliances connected to it. From the CosmoApp you can check the operating conditions of each machine and receive alerts in the event of abnormal operation.

Technical draw

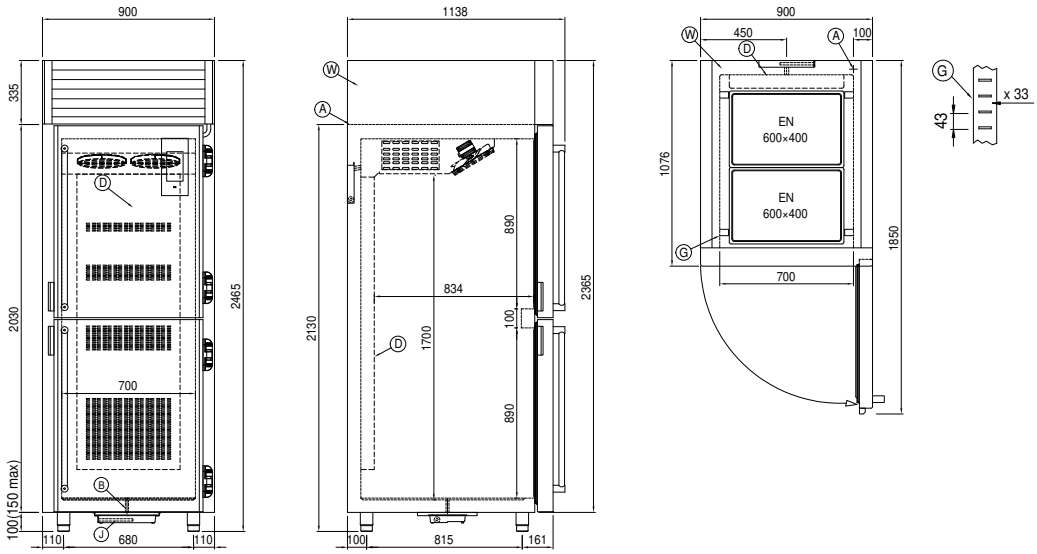

A:	Power supply cable outlet	**B:**	Condensation water drain	**D:**	Airflow conveyor
G:	Racks pitch	**J:**	Automatic evaporation of condensing water	**W:**	Water mains connection for humidifier - 3/4” female. Unloading not required

In order to constantly offer the best possible products we reserve the right to make changes on technical specifications without incurring any obligation for equipment previosly or subsequently sold.