Client _____ Quantity _____

Project _____ Position _____

Saladette GN counter 1 door

Model: TA09/1MD-710 **Cod:** T10102000211

Saladette refrigerated counter 1 door, counter body height 710 mm, top with splashback. Plug-in refrigeration unit, 5 heavy duty climatic class and R290 ecological refrigerant gas. Temperature range -2°+8°C with ventilated refrigeration. Equipment: 1 GN1/1 plastic coated shelf. Each compartment can be configured with 1/2+1/2, 1/3+2/3, 1/3+1/3+1/3 drawers. Anti-corrosion treated evaporator and hot gas defrosting. 60 mm insulation thickness - HFO with high insulation performance and low environmental impact (CFC, HCFC, HFC free). AISI 304 stainless steel handle and magnetic triple chamber door gasket, easily replaceable. Reversible, self-closing door opening with 105° stop. AISI 304 stainless steel interior/exterior including external back. Rounded inner corners for easy cleaning. The reinforced modular base in colaminated steel allows installation on wheels, feet, mobile or masonry plinths. Replaceable refrigerant system FSS - Fast Service System - for quick and easy service. Prepared for connection to Cosmo - wi-fi remote supervision system - and ModBus/RTU Rs485 connection.



Technical data

Top:	With top and splashback
Gross capacity:	120 lt
Temperature range:	-2°+8°C
Refrigerant unit:	Plug-in
Cooling gas:	R290 (GWP=3)
Refrigerant Charge:	110g
Defrost:	Hot gas
Body height:	710 mm
Valve:	Supplied standard with solenoid
Dimensions:	820×700×950 mm
Packing dimensions:	915×800×998 mm
Net / gross weight:	80 Kg / 90 Kg
Net / gross volume:	/ 120 lt
Voltage:	220-240 V - 50 Hz
Total rate:	250W - 1,15A
Cooling capacity:	406 W*
*:	Evap. -10°C Cond. +55°C

Features

Standard equipment:	1 slide, 1 plastic coated GN1/1 shelf
Control:	Electronic, display flush with the panel
Doors:	1 door, self-closing, reversible with 105° stop
Door gasket:	Magnetic, triple chamber and easily replaceable
Insulation:	60 mm thickness - CFC/HCFC free
Exterior/interior finishing:	Exterior interior and back in AISI 304 stainless steel. Base in colaminated steel.
Inner corners:	Rounded for easy cleaning and ensuring maximum hygiene
Handle:	Stainless steel AISI 304, 2 mm thick
Racks and slides:	Stainless steel AISI 304
Feets:	AISI 304 stainless steel adjustable h 100/150 mm
Cosmo:	Predisposed for Cosmo Hub connection

In order to constantly offer the best possible products we reserve the right to make changes on technical specifications without incurring any obligation for equipment previosly or subsequently sold.

Accessories and variants

Drawers 1/2	Granite flat worktop
Drawers 1/3	Adjustable feet h 145/195 mm
Drawers 1/3 + 2/3	4 Swivel and brake castors h 128 mm
Special counter body heights 650 mm	Brackets for GN pans for drawer
Special counter body heights 700 mm	GN1/2 container + lids kit for drawer, h 150 mm
Special counter body heights 750 mm	GN1/3 container + lids kit for drawer, h 150 mm
Technical compartment on the left	Stainless steel shelf GN1/1
Lock with key for drawer 1/2	Plastic coated shelf GN1/1
Lock with key for drawer 1/3	Pair of type C slides 505 mm
Lock with key for drawer 1/3 + 2/3	Serial interface, RS485 cable
LED lighting	Cosmo cable connection kit
RAL customisable colouring	Cosmo wifi connection kit
Plug-in water unit	IP44 schuko socket with cover
Stainless steel evaporator	Saladette pans kit, 1 door
Saladette lid, customised dimensions	Saladette lid, standard dimensions 1D
Saladette internal basin, customised dimensions	Saladette internal basin, standard dimensions 1D
Internal hygiene H3	Removable plinth GN 1D h 100 mm
Granite worktop with splashback	Removable plinth GN 1D h 150 mm

COSMO - wi-fi control

Cosmo is The Nice Kitchen's exclusive Wi-Fi technology that allows Coldline, Modular and Nevo appliances to be connected and monitored from a smartphone. The counter, connected with Cosmo kit via cable to a Cosmo hub (MODI, VISION, THAW.PRO, LEVTRONIC, QUBI) or with Cosmo Wi-Fi kit, can be monitored by the CosmoApp and receive alerts in case of abnormal operation.

Technical draw

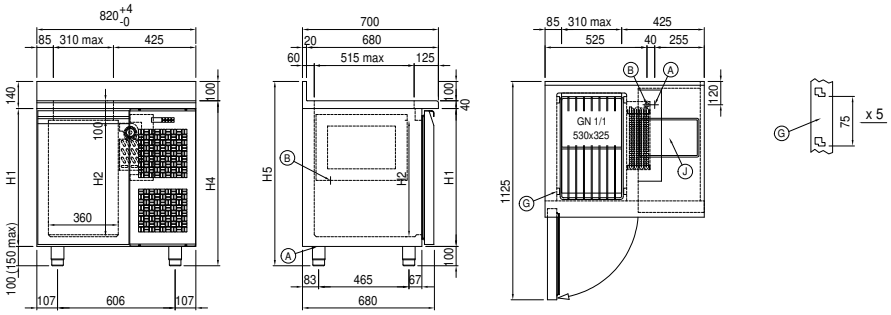

A: Power supply cable outlet

B: Condensation water drain

G: Racks pitch

J: Automatic evaporation of condensing water

In order to constantly offer the best possible products we reserve the right to make changes on technical specifications without incurring any obligation for equipment previosly or subsequently sold.