Client _____ Quantity _____

Project _____ Position _____

Master 600 counter 3 doors

Model: TS17/1BQR-660 **Cod:** T12310000403

Master 600 refrigerated counter 1 door, counter body height 660 mm, without top. Remote refrigeration unit, 5 heavy duty climatic class and R452a refrigerant gas. Temperature range -15°-22°C with ventilated refrigeration. Equipment: 3 325x430 mm plastic coated shelves. Each compartment can be configured with 1/2+1/2, 1/3+2/3, 1/3+1/3+1/3 drawers. Anti-corrosion treated evaporator and electric defrosting. 60 mm insulation thickness - HFO with high insulation performance and low environmental impact (CFC, HCFC, HFC free). AISI 304 stainless steel handle and magnetic triple chamber door gasket, easily replaceable. Reversible, self-closing door opening with 105° stop. AISI 304 stainless steel interior/exterior including external back. Rounded inner corners for easy cleaning. The reinforced modular base in colaminated steel allows installation on wheels, feet, mobile or masonry plinths. Replaceable refrigerant system FSS - Fast Service System - for quick and easy service. Prepared for connection to Cosmo - wi-fi remote supervision system - and ModBus/RTU Rs485 connection.



Technical data

Top:	Without top
Gross capacity:	330 lt
Temperature range:	-15°-22°C
Refrigerant unit:	remote
Cooling gas:	R452a (GWP=2.141)
Defrost:	Electric
Body height:	660 mm
Valve:	Supplied standard with solenoid
Dimensions:	1570×580×760 mm
Packing dimensions:	1875×800×998 mm
Net / gross weight:	86 Kg / 96 Kg
Net / gross volume:	201 lt / 330 lt
Voltage:	220-240 V - 50-60 Hz
Total rate:	945W - 4,3A
Cooling capacity:	540 W*
*:	Evap. -30°C Cond. +55°C

Features

Standard equipment:	3 slides, 3 plastic coated 325x430 mm shelves
Control:	Electronic, display flush with the panel
Doors:	3 doors, self-closing, reversible with 105° stop
Door gasket:	Magnetic, triple chamber and easily replaceable
Insulation:	60 mm thickness - CFC/HCFC free
Exterior/interior finishing:	Exterior interior and back in AISI 304 stainless steel. Base in colaminated steel.
Inner corners:	Rounded for easy cleaning and ensuring maximum hygiene
Handle:	Stainless steel AISI 304, 2 mm thick
Racks and slides:	Stainless steel AISI 304
Feets:	AISI 304 stainless steel adjustable h 100/150 mm
Cosmo:	Predisposed for Cosmo Hub connection

In order to constantly offer the best possible products we reserve the right to make changes on technical specifications without incurring any obligation for equipment previosly or subsequently sold.

Accessories and variants

- Drawers 1/2
- Drawers 1/3
- Drawers 1/3 + 2/3
- Special counter body heights 650 mm
- Special counter body heights 700 mm
- Special counter body heights 750 mm
- Technical compartment on the left
- Common technical compartment
- Counters without a technical compartment
- Lock with key for drawer 1/2
- Lock with key for drawer 1/3
- Lock with key for drawer 1/3 + 2/3
- LED lighting
- RAL customisable colouring
- Predisposition for connection to CO2 remote control unit
- Alimentazione frequenza 60Hz
- Other special voltage
- Internal hygiene H3
- Granite flat worktop
- Granite worktop with splashback
- Remote condensing unit NT2178GK
- Adjustable feet h 145/195 mm
- 4 Swivel and brake castors h 128 mm
- Brackets for GN pans for drawer
- GN1/2 container + lids kit for drawer, h 150 mm
- GN1/3 container + lids kit for drawer, h 150 mm
- Plastic coated shelf 325x430
- Pair of type C slides 405 mm
- Serial interface, RS485 cable
- Cosmo cable connection kit
- Cosmo wifi connection kit
- Removable plinth CQ 3DR h 100 mm

Remote unit technical data

Voltage:	220-240 V - 50 Hz
Unit total rate :	650W - 3,0A
Cooling gas:	R452A
Gross weight:	25,7 Kg
Dimensions:	500×330×295 mm
Pipe delivery:	Ø 3/8"
Pipe suction:	Ø 3/8"
Packing dimensions:	540×345×310 mm
Cooling capacity:	Evap. -30°C Cond. +55°C

COSMO - wi-fi control

Cosmo is The Nice Kitchen's exclusive Wi-Fi technology that allows Coldline, Modular and Nevo appliances to be connected and monitored from a smartphone. The counter, connected with Cosmo kit via cable to a Cosmo hub (MODI, VISION, THAW.PRO, LEVTRONIC, QUBI) or with Cosmo Wi-Fi kit, can be monitored by the CosmoApp and receive alerts in case of abnormal operation.

Technical draw

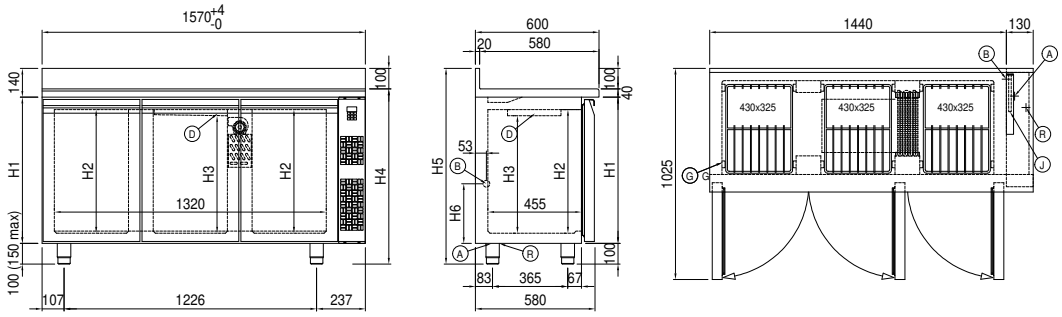

A:	Power supply cable outlet	**B:**	Condensation water drain	**D:**	Airflow conveyor
G:	Racks pitch	**J:**	Automatic evaporation of condensing water	**R:**	Gas output pipes

In order to constantly offer the best possible products we reserve the right to make changes on technical specifications without incurring any obligation for equipment previosly or subsequently sold.