Client _____ Quantity _____

Project _____ Position _____

Levtronic EN60x40 counter 2 doors

Model: TS13/1FH-760 **Cod:** T30200000802

Levtronic retarder prover 2 doors, counter body height 760 mm, without top. Plug-in refrigeration unit, 5 heavy duty climatic class and R290 ecological refrigerant gas. temperature range -6°+40°C. adjustable ventilation 25-100% and adjustable humidity 45-95%. 4,3" touch screen with operating mode with customisable recipes. Equipment: 8 pairs of slides for EN60x40 trays. It is equipped with the functions: retarded proving, manual proving, continuous cycle and storage. Anti-corrosion treated evaporator and hot gas defrosting. 60 mm insulation thickness - HFO with high insulation performance and low environmental impact (CFC, HCFC, HFC free). AISI 304 stainless steel handle and magnetic triple chamber door gasket, easily replaceable. Reversible, self-closing door opening with 105° stop. AISI 304 stainless steel interior/exterior including external back. Rounded inner corners for easy cleaning. The reinforced modular base in colaminated steel allows installation on wheels, feet, mobile or masonry plinths. Replaceable refrigerant system FSS - Fast Service System - for quick and easy service. Cosmo: wi-fi connection for remote monitoring via Cosmo App. When wired to Coldline counters and cabinets acts as a hub for remote monitoring of connected equipment.



Technical data

Top:	Without top
Max capacity:	14 trays EN60x40
Gross capacity:	421 lt
Temperature range:	-6°+40°C
Ventilation range:	25% - 100%
Humidity range:	45% - 95% with humidifier
Humidifier:	Including
Refrigerant unit:	Plug-in
Energetic class:	D
Energy efficiency index:	57,8
Annual consumption:	1445,4 kW/h annum
24h consumption:	3,96 kW/h/24h
Climate class:	5
Cooling gas:	R290 (GWP=3)
Refrigerant Charge:	110g
Defrost:	Hot gas
Body height:	760 mm
Valve:	Supplied standard with solenoid
Dimensions:	1450×780×860 mm
Packing dimensions:	1545×900×1010 mm
Net / gross weight:	131 Kg / 141 Kg
Net / gross volume:	278 lt / 421 lt
Voltage:	220-240 V - 50 Hz
Total rate:	1500W - 6,9A
Cooling capacity:	565 W*
*:	Evap. -10°C Cond. +55°C

Features

Functions:	Retarder prover, manual proving, continuous cycle and storage
Standard equipment:	8 slides EN60x40
Control:	4,3" touch screen display with USB port
Doors:	2 doors, self-closing, reversible with 105° stop
Door gasket:	Magnetic, triple chamber and easily replaceable
Insulation:	60 mm thickness - CFC/HCFC free
Exterior/interior finishing:	Exterior interior and back in AISI 304 stainless steel. Base in colaminated steel.
Inner corners:	Rounded for easy cleaning and ensuring maximum hygiene
Handle:	Stainless steel AISI 304, 2 mm thick
Racks and slides:	Stainless steel AISI 304
Feets:	AISI 304 stainless steel adjustable h 100/150 mm
Cosmo:	Wi-Fi remote control system

In order to constantly offer the best possible products we reserve the right to make changes on technical specifications without incurring any obligation for equipment previosly or subsequently sold.

Accessories and variants

RAL customisable colouring	Stainless steel shelf EN60x40
Stainless steel evaporator	Plastic coated shelf EN60x40
Alimentazione frequenza 60Hz	Pair of type L slides 605 mm
Other special voltage	Serial interface, RS485 cable
Purity C Quell ST 50 filter cartridge	IP44 schuko socket with cover
Aluminium coated backingan EN60x40 h 20 mm	Removable plinth EN 2D h 100 mm

COSMO - wi-fi control

Cosmo is The Nice Kitchen's exclusive Wi-Fi technology that allows Levtronic retarder provers to be connected, updated and monitored from smartphones. Levtronic is also a Cosmo hub and allows remote supervision of the Coldline appliances connected to it. From the CosmoApp you can check the operating conditions of each machine and receive alerts in the event of abnormal operation.

Technical draw

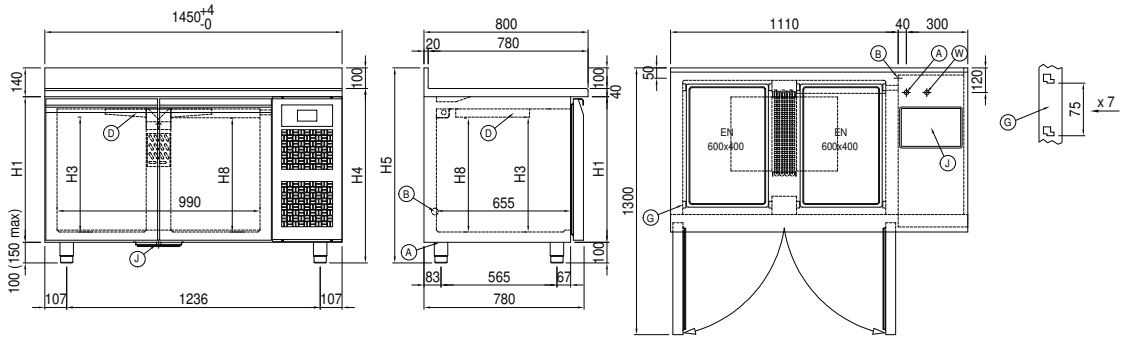

A:	Power supply cable outlet	**B:**	Condensation water drain	**D:**	Airflow conveyor
G:	Racks pitch	**J:**	Automatic evaporation of condensing water	**W:**	Water mains connection for humidifier - 3/4” female. Unloading not required

In order to constantly offer the best possible products we reserve the right to make changes on technical specifications without incurring any obligation for equipment previosly or subsequently sold.