Client _____ Quantity _____

Project _____ Position _____

# Levtronic EN60x40 counter 2 doors

**Model:** TA13/1FH-660 **Cod:** T30202000803

Levtronic retarder prover 2 doors, counter body height 660 mm, top with splashback. Plug-in refrigeration unit, 5 heavy duty climatic class and R290 ecological refrigerant gas. temperature range -6°+40°C. adjustable ventilation 25-100% and adjustable humidity 45-95%. 4,3" touch screen with operating mode with customisable recipes. Equipment: 8 pairs of slides for EN60x40 trays. It is equipped with the functions: retarded proving, manual proving, continuous cycle and storage. Anti-corrosion treated evaporator and hot gas defrosting. 60 mm insulation thickness - HFO with high insulation performance and low environmental impact (CFC, HCFC, HFC free). AISI 304 stainless steel handle and magnetic triple chamber door gasket, easily replaceable. Reversible, self-closing door opening with 105° stop. AISI 304 stainless steel interior/exterior including external back. Rounded inner corners for easy cleaning. The reinforced modular base in colaminated steel allows installation on wheels, feet, mobile or masonry plinths. Replaceable refrigerant system FSS - Fast Service System - for quick and easy service. Cosmo: wi-fi connection for remote monitoring via Cosmo App. When wired to Coldline counters and cabinets acts as a hub for remote monitoring of connected equipment.



## Technical data

| | |
|---|---|
| **Top:** | With top and splashback |
| **Max capacity:** | 14 trays EN60x40 |
| **Gross capacity:** | 357 lt |
| **Temperature range:** | -6°+40°C |
| **Ventilation range:** | 25% - 100% |
| **Humidity range:** | 45% - 95% with humidifier |
| **Humidifier:** | Including |
| **Refrigerant unit:** | Plug-in |
| **Energetic class:** | D |
| **Energy efficiency index:** | 50,2 |
| **Annual consumption:** | 1197 kW/h annum |
| **24h consumption:** | 3,2796 kW/h/24h |
| **Climate class:** | 5 |
| **Cooling gas:** | R290 (GWP=3) |
| **Defrost:** | Hot gas |
| **Body height:** | 660 mm |
| **Valve:** | Supplied standard with solenoid |
| **Dimensions:** | 1450×800×900 mm |
| **Packing dimensions:** | 1545×900×998 mm |
| **Net / gross weight:** | 139 Kg / 149 Kg |
| **Net / gross volume:** | 230 lt / 357 lt |
| **Voltage:** | 220-240 V - 50 Hz |
| **Total rate:** | 1500W - 6,9A |
| **Cooling capacity:** | 565 W* |
| *: | Evap. -10°C Cond. +55°C |

## Features

| | |
|---|---|
| **Functions:** | Retarder prover, manual proving, continuous cycle and storage |
| **Standard equipment:** | 8 slides EN60x40 |
| **Control:** | 4,3" touch screen display with USB port |
| **Doors:** | 2 doors, self-closing, reversible with 105° stop |
| **Door gasket:** | Magnetic, triple chamber and easily replaceable |
| **Insulation:** | 60 mm thickness - CFC/HCFC free |
| **Exterior/interior finishing:** | Exterior interior and back in AISI 304 stainless steel. Base in colaminated steel. |
| **Inner corners:** | Rounded for easy cleaning and ensuring maximum hygiene |
| **Handle:** | Stainless steel AISI 304, 2 mm thick |
| **Racks and slides:** | Stainless steel AISI 304 |
| **Feets:** | AISI 304 stainless steel adjustable h 100/150 mm |
| **Cosmo:** | Wi-Fi remote control system |

In order to constantly offer the best possible products we reserve the right to make changes on technical specifications without incurring any obligation for equipment previosly or subsequently sold.

## Accessories and variants

| | |
|---|---|
| RAL customisable colouring | Stainless steel shelf EN60x40 |
| Stainless steel evaporator | Plastic coated shelf EN60x40 |
| Alimentazione frequenza 60Hz | Pair of type L slides 605 mm |
| Other special voltage | Serial interface, RS485 cable |
| Purity C Quell ST 50 filter cartridge | IP44 schuko socket with cover |
| Aluminium coated backingan EN60x40 h 20 mm | Removable plinth EN 2D h 100 mm |

## COSMO - wi-fi control

Cosmo is The Nice Kitchen's exclusive Wi-Fi technology that allows Levtronic retarder provers to be connected, updated and monitored from smartphones. Levtronic is also a Cosmo hub and allows remote supervision of the Coldline appliances connected to it. From the CosmoApp you can check the operating conditions of each machine and receive alerts in the event of abnormal operation.

## Technical draw

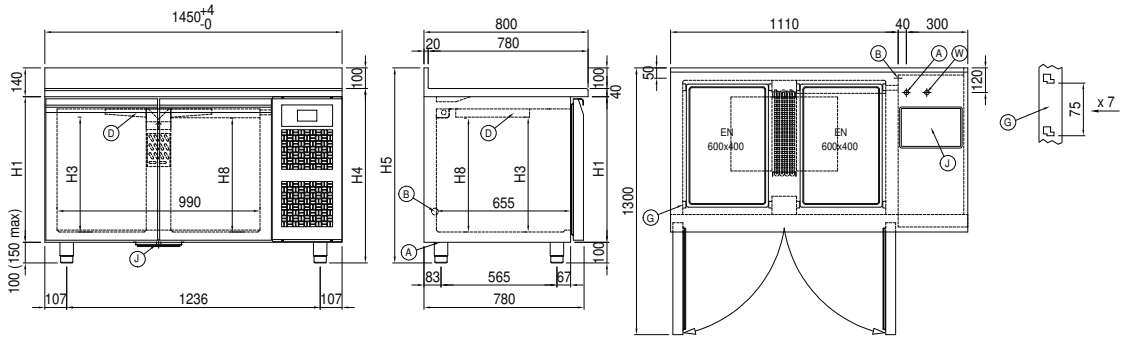


| | | | | | |
|---|---|---|---|---|---|
| **A:** | Power supply cable outlet | **B:** | Condensation water drain | **D:** | Airflow conveyor |
| **G:** | Racks pitch | **J:** | Automatic evaporation of condensing water | **W:** | Water mains connection for humidifier - 3/4” female. Unloading not required |

In order to constantly offer the best possible products we reserve the right to make changes on technical specifications without incurring any obligation for equipment previosly or subsequently sold.