Client _____ Quantity _____

Project _____ Position _____

# Modi Active Blast Chiller Counter

**Model:** WTA7AR **Cod:** W17078012001

Modi counter multifunction blast chiller 7 trays Active version, top with splashback, temperature range -40°+65°C. It is equipped with the functions: blast chilling, blast freezing, manual cycle, thawing, proving, holding, desiccation, chocolate. Remote cooling system with R452a refrigerant gas. 4.3" touch screen and operating mode with customisable recipes, by time or with core probe. Adjustable ventilation 25-100%. Blast chilling yield +90/+3°C - 34 Kg; blast freezing yield +90/-18°C - 24 Kg. 5 heavy duty climatic class, forced air defrost. 60 mm insulation thickness - HFO with high insulation performance and low environmental impact (CFC, HCFC, HFC free). Electronic expansion valve and anti-corrosion painted evaporator. Easily replaceable triple chamber magnetic gasket and core probe with screw connector. Exterior and interior AISI 304 stainless steel. Equipment: 7 GN1/1-EN60x40 pairs of slides. ModBus/RTU Rs485 connection as standard. Cosmo: wi-fi connection for remote monitoring via Cosmo App. When wired to Coldline counters and cabinets acts as a hub for remote monitoring of connected equipment.



## Technical data

| | |
|---|---|
| **Top:** | Reinforced worktop with in order to place an oven |
| **Gross capacity:** | 248 lt |
| **Temperature range:** | -40°+65°C |
| **Ventilation range:** | 25% - 100% |
| **Humidifier:** | Not available |
| **Refrigerant unit:** | remote |
| **Yield +90/+3:** | 34 kg |
| **Yield +90/-18:** | 24 kg |
| **Cooling gas:** | R452a (GWP=2.141) |
| **Defrost:** | Forced air |
| **Body height:** | 710 mm |
| **Valve:** | Electronic expansion valve |
| **Dimensions:** | 1400×700×950 mm |
| **Packing dimensions:** | 1545×900×998 mm |
| **Net / gross weight:** | 125 Kg / 135 Kg |
| **Net / gross volume:** | / 248 lt |
| **Voltage:** | 220-240 V - 50-60 Hz |
| **Total rate:** | 750 W - 3,62 A |
| **Cooling capacity:** | 2084 W* |
| *: | Evap. -10°C Cond. +45°C |

## Features

| | |
|---|---|
| **Functions:** | Blast chilling, shock freezing, thawing, proving, holding, desiccation, chocolate, manual cycle |
| **Standard equipment:** | 7 slides GN1/1, EN60x40 |
| **Control:** | 4,3" touch screen display with USB port |
| **Door gasket:** | Magnetic, triple chamber and easily replaceable |
| **Core probe:** | Needle probe with 1 reading point, quick-release and easily replaceable |
| **Insulation:** | 60 mm thickness - CFC/HCFC free |
| **Exterior/interior finishing:** | Exterior and interior AISI 304 stainless steel. |
| **Inner corners:** | Rounded for easy cleaning and ensuring maximum hygiene |
| **Handle:** | Stainless steel AISI 304, 2 mm thick |
| **Racks and slides:** | Stainless steel AISI 304, quick release |
| **Feets:** | AISI 304 stainless steel adjustable h 100/150 mm |
| **Cosmo:** | Wi-Fi remote control system |

In order to constantly offer the best possible products we reserve the right to make changes on technical specifications without incurring any obligation for equipment previosly or subsequently sold.

## Accessories and variants

| | |
|---|---|
| RAL customisable colouring | Lowered foot h 55/70 mm |
| Sonda al cuore a 3 punti di lettura | 4 Swivel and brake castors h 128 mm |
| Sonda al cuore riscaldata a 1 punto di lettura | Stainless steel shelf GN1/1 |
| Reverse door opening from standard | Plastic coated shelf GN1/1 |
| Alimentazione frequenza 60Hz | Stainless steel shelf EN60x40 |
| Other special voltage | Plastic coated shelf EN60x40 |
| Remote condensing unit W7T counter | Pair of type L slides 398 mm GN-EN |

## Remote unit technical data

| | |
|---|---|
| **Voltage:** | 220-240 V - 50 Hz |
| **Cooling gas:** | R404-R452a |
| **Gross weight:** | 25 Kg |
| **Dimensions:** | 650×650×400 mm |
| **Pipe delivery:** | 10 mm |
| **Pipe suction:** | 10 mm |
| **Cooling capacity:** | Evap. -10°C Cond. +45°C |

## COSMO - wi-fi control

Cosmo is The Nice Kitchen's exclusive Wi-Fi technology that allows MODI blast chillers to be connected, updated and monitored from smartphones. MODI is also a Cosmo hub and allows remote supervision of the Coldline appliances connected to it. From the CosmoApp you can check the operating conditions of each machine and receive alerts in the event of abnormal operation.

## Technical draw

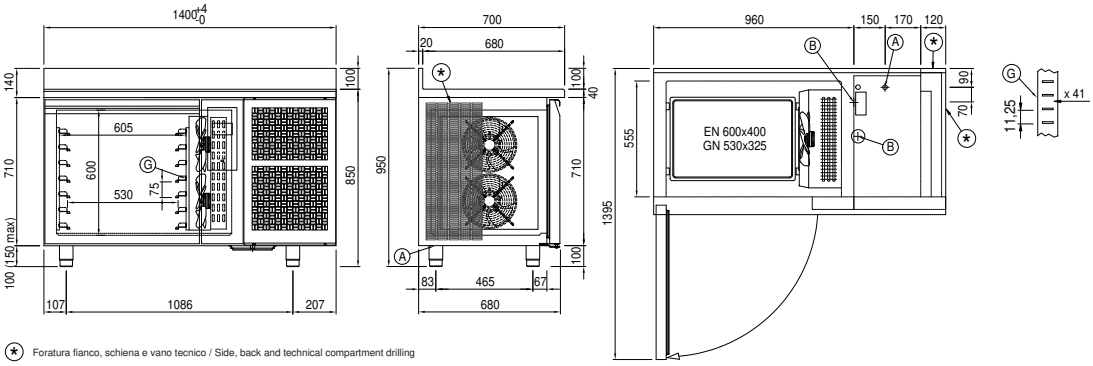


**A:** Power supply cable outlet

**B:** Condensation water drain

**G:** Racks pitch

**J:** Automatic evaporation of condensing water

In order to constantly offer the best possible products we reserve the right to make changes on technical specifications without incurring any obligation for equipment previosly or subsequently sold.