Client _____ Quantity _____

Project _____ Position _____

Modi Active Roll-in Blast Chiller

Model: W20KAER **Cod:** W22208000001



Modi multifunction blast chiller 20 trays Active version, Roll-in, temperature range -40°+65°C. It is equipped with the functions: blast chilling, blast freezing, manual cycle, thawing, proving, holding, desiccation, chocolate. Remote cooling system with R452a refrigerant gas. 4.3" touch screen and operating mode with customisable recipes, by time or with core probe. Adjustable ventilation 25-100%. Blast chilling yield +90/+3°C - 88 Kg; blast freezing yield +90/-18°C - 62 Kg. 5 heavy duty climatic class, forced air defrost. 75 mm insulation thickness - HFO with high insulation performance and low environmental impact (CFC, HCFC, HFC free). Electronic expansion valve and anti-corrosion painted evaporator. Easily replaceable triple chamber magnetic gasket and core probe with screw connector. Exterior and interior AISI 304 stainless steel, removable fan unit and condenser cover. For trolleys EN60x40. ModBus/RTU Rs485 connection as standard. Cosmo: wi-fi connection for remote monitoring via Cosmo App. When wired to Coldline counters and cabinets acts as a hub for remote monitoring of connected equipment.

Technical data

Gross capacity:	977 lt
Temperature range:	-40°+65°C
Ventilation range:	25% - 100%
Humidifier:	Not available
Refrigerant unit:	remote
Yield +90/+3:	88 kg
Yield +90/-18:	62 kg
Climate class:	5
Cooling gas:	R452a (GWP=2.141)
Defrost:	Forced air
Valve:	Electronic expansion valve
Dimensions:	810×1015×2115 mm
Packing dimensions:	905×1130×2240 mm
Net / gross weight:	185 Kg / 195 Kg
Net / gross volume:	/ 977 lt
Voltage:	400-415 V - 50-60 Hz
Total rate:	1460 W - 7,05 A
Cooling capacity:	7751 W*
*:	Evap. -10°C Cond. +45°C

Features

Functions:	Blast chilling, shock freezing, thawing, proving, holding, desiccation, chocolate, manual cycle
Control:	4,3" touch screen display with USB port
Doors:	Cushioned, with anti-odor system
Door gasket:	Magnetic, triple chamber and easily replaceable
Core probe:	Needle probe with 1 reading point, quick-release and easily replaceable
Insulation:	75 mm thickness - CFC/HCFC free
Exterior/interior finishing:	Exterior and interior AISI 304 stainless steel.
Inner corners:	Rounded for easy cleaning and ensuring maximum hygiene
Handle:	Stainless steel AISI 304, 2 mm thick
Racks and slides:	Stainless steel AISI 304, quick release
Cosmo:	Wi-Fi remote control system

In order to constantly offer the best possible products we reserve the right to make changes on technical specifications without incurring any obligation for equipment previosly or subsequently sold.

Accessories and variants

RAL customisable colouring	Alimentazione frequenza 60Hz
Sonda al cuore a 3 punti di lettura	Other special voltage
Sonda al cuore riscaldata a 1 punto di lettura	Open remote condensing unit W20T
Reverse door opening from standard	Silenced faired remote condensing unit W20T
Alimentazione Monofase 50Hz oppure 60Hz	Trolley EN60x40 20 trays 620x470x1630 mm
Alimentazione Trifase 50Hz oppure 60Hz	Sterilizing UV lamp

Remote unit technical data

Voltage:	400-415 V - 50-60 Hz
Unit total rate :	3,18W - 6,9A
Cooling gas:	R404-R452a
HP unit:	3
Gross weight:	93 Kg
Dimensions:	930×680×450 mm
Pipe delivery:	12 mm
Pipe suction:	28 mm
Cooling capacity:	Evap. -10°C Cond. +45°C

COSMO - wi-fi control

Cosmo is The Nice Kitchen's exclusive Wi-Fi technology that allows MODI blast chillers to be connected, updated and monitored from smartphones. MODI is also a Cosmo hub and allows remote supervision of the Coldline appliances connected to it. From the CosmoApp you can check the operating conditions of each machine and receive alerts in the event of abnormal operation.

Technical draw

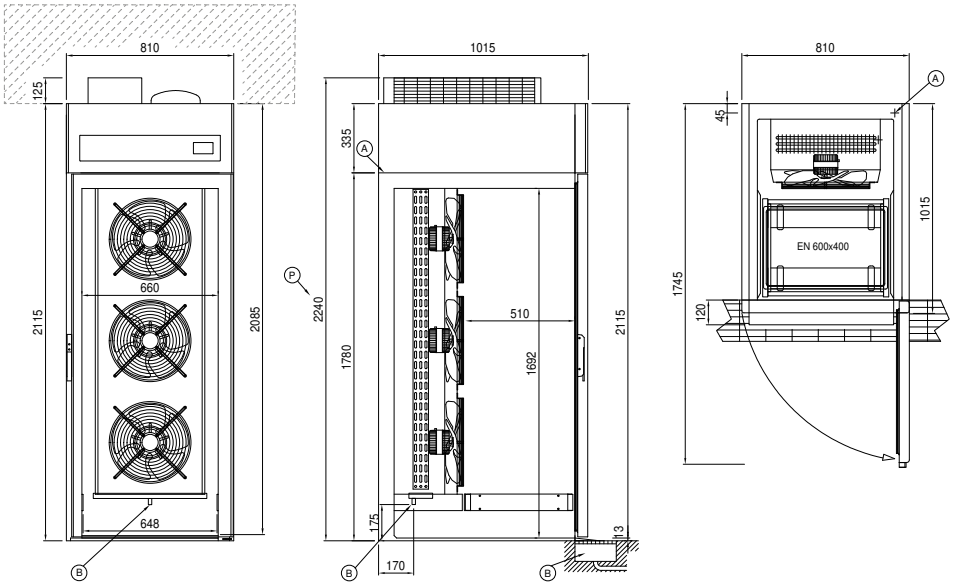

A: Power supply cable outlet

B: Condensation water drain

Q: Plug-In

R: Gas output pipes

In order to constantly offer the best possible products we reserve the right to make changes on technical specifications without incurring any obligation for equipment previosly or subsequently sold.