Client _____ Quantity _____

Project _____ Position _____

Modi Active Blast Chiller Counter

Model: W7TAAER **Cod:** W27078012001

Modi counter multifunction blast chiller 7 trays Active version, top with splashback, temperature range -40°+65°C. It is equipped with the functions: blast chilling, blast freezing, manual cycle, thawing, proving, holding, desiccation, chocolate. Remote cooling system with R452a refrigerant gas. 4.3" touch screen and operating mode with customisable recipes, by time or with core probe. Adjustable ventilation 25-100%. Blast chilling yield +90/+3°C - 34 Kg; blast freezing yield +90/-18°C - 24 Kg. 5 heavy duty climatic class, forced air defrost. 60 mm insulation thickness - HFO with high insulation performance and low environmental impact (CFC, HCFC, HFC free). Electronic expansion valve and anti-corrosion painted evaporator. Easily replaceable triple chamber magnetic gasket and core probe with screw connector. Exterior and interior AISI 304 stainless steel. Equipment: 7 EN60x40 pairs of slides. ModBus/RTU Rs485 connection as standard. Cosmo: wi-fi connection for remote monitoring via Cosmo App. When wired to Coldline counters and cabinets acts as a hub for remote monitoring of connected equipment.



Technical data

Top:	Reinforced worktop with in order to place an oven
Gross capacity:	248 lt
Temperature range:	-40°+65°C
Ventilation range:	25% - 100%
Humidifier:	Not available
Refrigerant unit:	remote
Yield +90/+3:	34 kg
Yield +90/-18:	24 kg
Cooling gas:	R452a (GWP=2.141)
Defrost:	Forced air
Body height:	710 mm
Valve:	Electronic expansion valve
Dimensions:	1400×700×950 mm
Packing dimensions:	1545×900×998 mm
Net / gross weight:	125 Kg / 135 Kg
Net / gross volume:	/ 248 lt
Voltage:	220-240 V - 50-60 Hz
Total rate:	750 W - 3,62 A
Cooling capacity:	2084 W*
*:	Evap. -10°C Cond. +45°C

Features

Functions:	Blast chilling, shock freezing, thawing, proving, holding, desiccation, chocolate, manual cycle
Standard equipment:	7 slides EN60x40
Control:	4,3" touch screen display with USB port
Door gasket:	Magnetic, triple chamber and easily replaceable
Core probe:	Needle probe with 1 reading point, quick-release and easily replaceable
Insulation:	60 mm thickness - CFC/HCFC free
Exterior/interior finishing:	Exterior and interior AISI 304 stainless steel.
Inner corners:	Rounded for easy cleaning and ensuring maximum hygiene
Handle:	Stainless steel AISI 304, 2 mm thick
Racks and slides:	Stainless steel AISI 304, quick release
Feets:	AISI 304 stainless steel adjustable h 100/150 mm
Cosmo:	Wi-Fi remote control system

In order to constantly offer the best possible products we reserve the right to make changes on technical specifications without incurring any obligation for equipment previosly or subsequently sold.

Accessories and variants

RAL customisable colouring	Lowered foot h 55/70 mm
Sonda al cuore a 3 punti di lettura	4 Swivel and brake castors h 128 mm
Sonda al cuore riscaldata a 1 punto di lettura	Aluminium coated backingan EN60x40 h 20 mm
Reverse door opening from standard	Stainless steel shelf EN60x40
Alimentazione frequenza 60Hz	Plastic coated shelf EN60x40
Other special voltage	Pair of type L slides 398 mm EN
Remote condensing unit W10-W14T	Sterilizing UV lamp

Remote unit technical data

Voltage:	220-240 V - 50 Hz
Cooling gas:	R404-R452a
Gross weight:	25 Kg
Dimensions:	650×650×400 mm
Pipe delivery:	10 mm
Pipe suction:	10 mm
Cooling capacity:	Evap. -10°C Cond. +45°C

COSMO - wi-fi control

Cosmo is The Nice Kitchen's exclusive Wi-Fi technology that allows MODI blast chillers to be connected, updated and monitored from smartphones. MODI is also a Cosmo hub and allows remote supervision of the Coldline appliances connected to it. From the CosmoApp you can check the operating conditions of each machine and receive alerts in the event of abnormal operation.

Technical draw

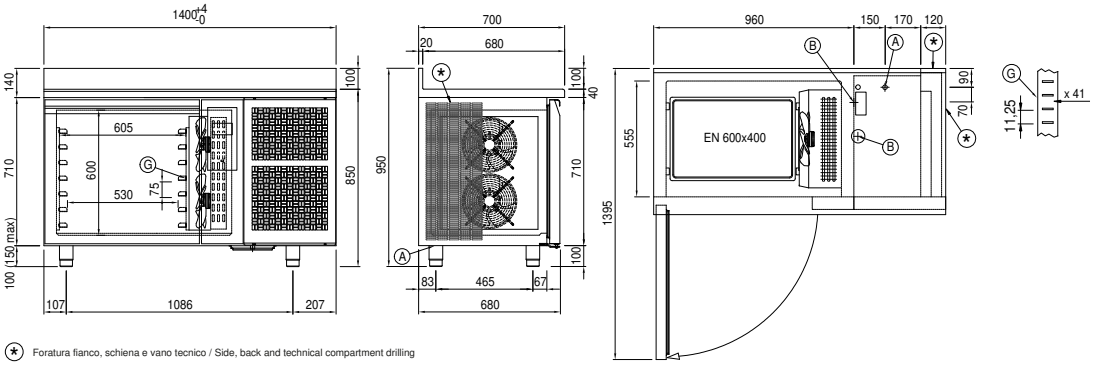

A: Power supply cable outlet

B: Condensation water drain

G: Racks pitch

In order to constantly offer the best possible products we reserve the right to make changes on technical specifications without incurring any obligation for equipment previosly or subsequently sold.