Client _____ Quantity _____

Project _____ Position _____

Vision F Blast Chiller

Model: W7FR **Cod:** W64075000001

Vision multifunction blast chiller 7 trays F version, depth 800 mm, temperature range -40°+65°C with humidifier boiler as standard. It is equipped with the functions: blast chilling, blast freezing, manual cycle, thawing, proving, retarded proving, holding, desiccation, chocolate, yoghurt, steam sanitising. Remote cooling system with R452a refrigerant gas. Devote™ - Dynamic Evolution Temperature - the innovative system that autonomously recognises the weight, size and temperature of food and automatically shortens the blast chilling or freezing time of hot food without the use of a core probe. 7" touch screen on the door and operating mode with customisable recipes, by time, with core probe or with Devote algorithm. Adjustable ventilation 25-100%, adjustable humidity 45-95%. Blast chilling yield +90/+3°C - 34 Kg; blast freezing yield +90/-18°C - 25 Kg. 5 heavy duty climatic class, forced air defrost. 60 mm insulation thickness - HFO with high insulation performance and low environmental impact (CFC, HCFC, HFC free). Electronic expansion valve and anti-corrosion painted evaporator. Cushioned door with anti-odour system with Easily replaceable triple chamber magnetic gasket, core probe with screw connector, housing on the port and led lighting. Exterior and interior AISI 304 stainless steel, interior made of "canvas" steel with special highly durable texture. fan unit and condenser cover removable without tools. Equipment: 7 GN1/1-EN60x40 pairs of slides. ModBus/RTU Rs485 connection as standard. Cosmo: wi-fi connection for remote monitoring via Cosmo App. When wired to Coldline counters and cabinets acts as a hub for remote monitoring of connected equipment.



Technical data

Top:	Thickness 4 cm. Reinforced in order to place an oven
Max capacity:	11 trays GN1/1, EN60x40 h 20 mm
Gross capacity:	238 lt
Temperature range:	-40°+65°C
Ventilation range:	25% - 100%
Humidity range:	45% - 95% with humidifier
Humidifier:	Including
Refrigerant unit:	remote
Yield +90/+3:	34 kg
Yield +90/-18:	25 kg
Cooling gas:	R452a (GWP=2.141)
Defrost:	Forced air
Valve:	Electronic expansion valve
Dimensions:	780×859×1093 mm
Packing dimensions:	875×915×1141 mm
Net / gross weight:	105 Kg / 115 Kg
Net / gross volume:	/ 238 lt
Voltage:	220-240 V - 50-60 Hz
Total rate:	1317 W - 5,8 A
Cooling capacity:	2084 W*
*:	Evap. -10°C Cond. +45°C

Features

Functions:	Blast chilling, shock freezing, thawing, proving and retarder prover, holding, desiccation, chocolate, yoghurt, steam sanitizing, manual cycle
Standard equipment:	7 slides GN1/1, EN60x40
Control:	7" touch screen display with USB port
Doors:	Cushioned, with anti-odor system
Door gasket:	Magnetic, triple chamber and easily replaceable
Core probe:	Needle probe with 1 reading point, quick-release and easily replaceable
Insulation:	60 mm thickness - CFC/HCFC free
Exterior/interior finishing:	Exterior and interior AISI 304 stainless steel. Internal and external in “linen canvas” steel
Inner corners:	Rounded for easy cleaning and ensuring maximum hygiene
Handle:	In AISI 304 stainless steel
Racks and slides:	Stainless steel AISI 304, quick release
Feets:	AISI 304 stainless steel adjustable h 100/150 mm
Cosmo:	Wi-Fi remote control system

In order to constantly offer the best possible products we reserve the right to make changes on technical specifications without incurring any obligation for equipment previosly or subsequently sold.

Accessories and variants

RAL customisable colouring	Lowered foot h 55/70 mm
Sonda al cuore a 3 punti di lettura	4 Swivel and brake castors h 128 mm
Sonda al cuore riscaldata a 1 punto di lettura	Stainless steel shelf GN1/1
Reverse door opening from standard	Plastic coated shelf GN1/1
Alimentazione Monofase 50Hz oppure 60Hz	Stainless steel shelf EN60x40
Alimentazione Trifase 50Hz oppure 60Hz	Plastic coated shelf EN60x40
Alimentazione frequenza 60Hz	Pair of type L slides 398 mm GN-EN
Other special voltage	Pair of type L slides 398 mm EN
Remote condensing unit W6-W7T	Sanitizing detergent
Purity C Quell ST 50 filter cartridge	Touch screen kit for storage device control

Remote unit technical data

Voltage:	220-240 V - 50 Hz
Cooling gas:	R404-R452a
Gross weight:	25 Kg
Dimensions:	780×752×280 mm
Pipe delivery:	10 mm
Pipe suction:	10 mm
Cooling capacity:	Evap. -10°C Cond. +45°C

COSMO - wi-fi control

Cosmo is The Nice Kitchen's exclusive Wi-Fi technology that allows VISION blast chillers to be connected, updated and monitored from smartphones. VISION is also a Cosmo hub and allows remote supervision of the Coldline appliances connected to it. From the CosmoApp you can check the operating conditions of each machine and receive alerts in the event of abnormal operation.

Technical draw

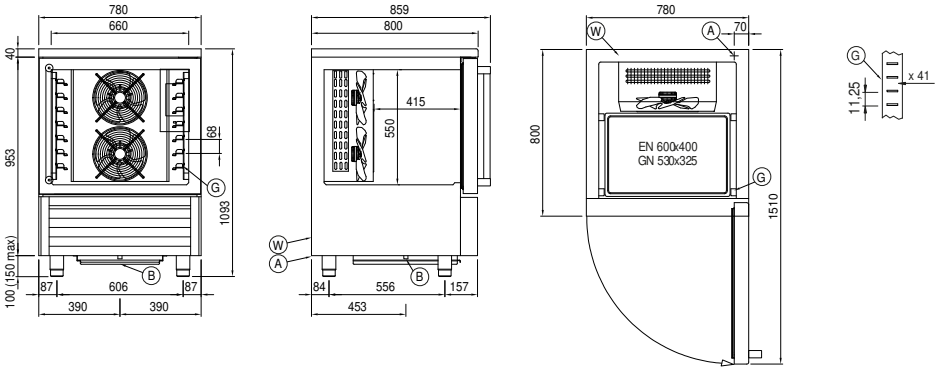

A: Power supply cable outlet

B: Condensation water drain

G: Racks pitch

W: Water mains connection for humidifier - 3/4” female. Unloading not required

In order to constantly offer the best possible products we reserve the right to make changes on technical specifications without incurring any obligation for equipment previosly or subsequently sold.