Client _____ Quantity _____

Project _____ Position _____

Vision F Blast Chiller Counter

Model: WTP7F **Cod:** W67073011001

Vision counter multifunction blast chiller 7 trays F version with top, temperature range -40°+65°C with humidifier boiler as standard. It is equipped with the functions: blast chilling, blast freezing, manual cycle, thawing, proving, retarded proving, holding, desiccation, chocolate, yoghurt, steam sanitising. Plug-In refrigeration system with air condensation with R452a refrigerant gas. Devote™ - Dynamic Evolution Temperature - the innovative system that autonomously recognises the weight, size and temperature of food and automatically shortens the blast chilling or freezing time of hot food without the use of a core probe. 7" touch screen and operating mode with customisable recipes, by time, with core probe or with Devote algorithm. Adjustable ventilation 25-100%, adjustable humidity 45-95%. Blast chilling yield +90/+3°C - 34 Kg; blast freezing yield +90/-18°C - 24 Kg. 5 heavy duty climatic class, hot gas defrost. 60 mm insulation thickness - HFO with high insulation performance and low environmental impact (CFC, HCFC, HFC free). Electronic expansion valve and anti-corrosion painted evaporator. Easily replaceable triple chamber magnetic gasket, core probe with screw connector and led lighting. Exterior and interior AISI 304 stainless steel. Equipment: 7 GN1/1-EN60x40 pairs of slides. ModBus/RTU Rs485 connection as standard. Cosmo: wi-fi connection for remote monitoring via Cosmo App. When wired to Coldline counters and cabinets acts as a hub for remote monitoring of connected equipment.



Technical data

Top:	Thickness 4 cm. Reinforced in order to place an oven
Max capacity:	11 trays GN1/1, EN60x40 h 20 mm
Gross capacity:	248 lt
Temperature range:	-40°+65°C
Ventilation range:	25% - 100%
Humidity range:	45% - 95% with humidifier
Humidifier:	Including
Refrigerant unit:	Plug-in
Yield +90/+3:	34 kg
Yield +90/-18:	24 kg
Climate class:	5
Cooling gas:	R452a (GWP=2.141)
Defrost:	Hot gas
Body height:	710 mm
Valve:	Electronic expansion valve
Dimensions:	1400×700×850 mm
Packing dimensions:	1545×900×998 mm
Net / gross weight:	160 Kg / 170 Kg
Net / gross volume:	/ 248 lt
Voltage:	220-240 V - 50 Hz
Total rate:	1950 W - 9,42 A
Cooling capacity:	2084 W*
*:	Evap. -10°C Cond. +45°C

Features

Functions:	Blast chilling, shock freezing, thawing, proving and retarder prover, holding, desiccation, chocolate, yoghurt, steam sanitizing, manual cycle
Standard equipment:	7 slides GN1/1, EN60x40
Control:	7" touch screen display with USB port
Door gasket:	Magnetic, triple chamber and easily replaceable
Core probe:	Needle probe with 1 reading point, quick-release and easily replaceable
Insulation:	60 mm thickness - CFC/HCFC free
Exterior/interior finishing:	Exterior and interior AISI 304 stainless steel. Internal and external in “linen canvas” steel
Inner corners:	Rounded for easy cleaning and ensuring maximum hygiene
Handle:	Stainless steel AISI 304, 2 mm thick
Racks and slides:	Stainless steel AISI 304, quick release
Feets:	AISI 304 stainless steel adjustable h 100/150 mm
Cosmo:	Wi-Fi remote control system

In order to constantly offer the best possible products we reserve the right to make changes on technical specifications without incurring any obligation for equipment previosly or subsequently sold.

Accessories and variants

RAL customisable colouring	Stainless steel shelf GN1/1
Sonda al cuore a 3 punti di lettura	Plastic coated shelf GN1/1
Sonda al cuore riscaldata a 1 punto di lettura	Stainless steel shelf EN60x40
Reverse door opening from standard	Plastic coated shelf EN60x40
Alimentazione frequenza 60Hz	Pair of type L slides 398 mm GN-EN
Other special voltage	Pair of type L slides 398 mm EN
Purity C Quell ST 50 filter cartridge	Sanitizing detergent
Lowered foot h 55/70 mm	Touch screen kit for storage device control
4 Swivel and brake castors h 128 mm	Cosmo cable connection kit

COSMO - wi-fi control

Cosmo is The Nice Kitchen's exclusive Wi-Fi technology that allows VISION blast chillers to be connected, updated and monitored from smartphones. VISION is also a Cosmo hub and allows remote supervision of the Coldline appliances connected to it. From the CosmoApp you can check the operating conditions of each machine and receive alerts in the event of abnormal operation.

Technical draw

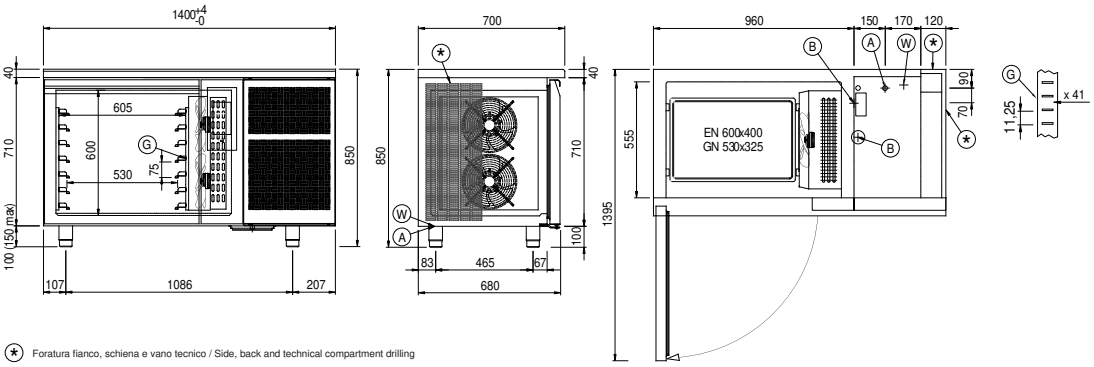

A: Power supply cable outlet

B: Condensation water drain

G: Racks pitch

W: Water mains connection for humidifier - 3/4” female. Unloading not required

In order to constantly offer the best possible products we reserve the right to make changes on technical specifications without incurring any obligation for equipment previosly or subsequently sold.