Client _____ Quantity _____

Project _____ Position _____

Modi Active Power Blast Chiller

Model: W20PAE **Cod:** W21196100011



Modi multifunction blast chiller Power 20 trays Active version, temperature range -40°+65°C. It is equipped with the functions: blast chilling, blast freezing, manual cycle, thawing, proving, holding, desiccation, chocolate. Plug-In refrigeration system with air condensation with R452a refrigerant gas. 4.3" touch screen and operating mode with customisable recipes, by time or with core probe. Adjustable ventilation 25-100%. Blast chilling yield +90/+3°C - 80 Kg; blast freezing yield +90/-18°C - 60 Kg. 5 heavy duty climatic class, hot gas defrost. 60 mm insulation thickness - HFO with high insulation performance and low environmental impact (CFC, HCFC, HFC free). Mechanical expansion valve and anti-corrosion painted evaporator. Cushioned door with anti-odour system with Easily replaceable triple chamber magnetic gasket and core probe with screw connector. Exterior and interior AISI 304 stainless steel, removable fan unit and condenser cover. Equipment: 10 EN60x80 pairs of slides. ModBus/RTU Rs485 connection as standard. Cosmo: wi-fi connection for remote monitoring via Cosmo App. When wired to Coldline counters and cabinets acts as a hub for remote monitoring of connected equipment.

Technical data

Top:	4 cm thickness
Gross capacity:	513 lt
Temperature range:	-40°+65°C
Ventilation range:	25% - 100%
Humidifier:	Not available
Refrigerant unit:	Plug-in
Yield +90/+3:	75 kg
Yield +90/-18:	55 kg
Climate class:	5
Cooling gas:	R290 (GWP=3)
Refrigerant Charge:	450g
Defrost:	Hot gas
Valve:	Mechanical expansion
Dimensions:	1100×1045×1843 mm
Packing dimensions:	1180×1125×1905 mm
Net / gross weight:	260 Kg / 270 Kg
Net / gross volume:	/ 513 lt
Voltage:	400-415 V - 50-60 Hz
Total rate:	4760W - 7,2A
Cooling capacity:	8319 W*
*:	Evap. -10°C Cond. +45°C

Features

Functions:	Blast chilling, shock freezing, thawing, proving, holding, desiccation, chocolate, manual cycle
Standard equipment:	10 slides EN60x80
Control:	4,3" touch screen display with USB port
Doors:	With odour control system
Door gasket:	Magnetic, triple chamber and easily replaceable
Core probe:	Needle probe with 1 reading point, quick-release and easily replaceable
Insulation:	60 mm thickness - CFC/HCFC free
Exterior/interior finishing:	Exterior and interior AISI 304 stainless steel.
Inner corners:	Rounded for easy cleaning and ensuring maximum hygiene
Handle:	Stainless steel AISI 304, 2 mm thick
Racks and slides:	Stainless steel AISI 304, quick release
Feets:	AISI 304 stainless steel adjustable h 100/150 mm
Cosmo:	Wi-Fi remote control system

In order to constantly offer the best possible products we reserve the right to make changes on technical specifications without incurring any obligation for equipment previosly or subsequently sold.

COSMO - wi-fi control

Cosmo is The Nice Kitchen's exclusive Wi-Fi technology that allows MODI blast chillers to be connected, updated and monitored from smartphones. MODI is also a Cosmo hub and allows remote supervision of the Coldline appliances connected to it. From the CosmoApp you can check the operating conditions of each machine and receive alerts in the event of abnormal operation.

Technical draw

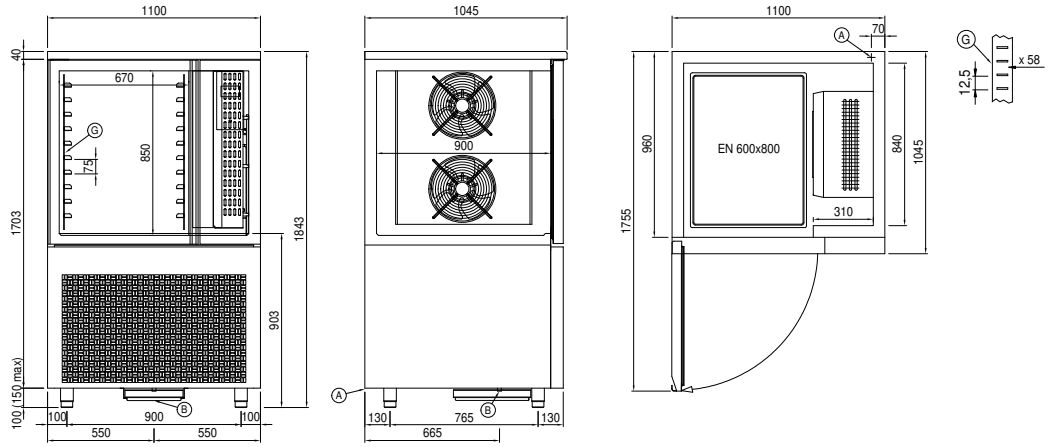

In order to constantly offer the best possible products we reserve the right to make changes on technical specifications without incurring any obligation for equipment previosly or subsequently sold.